B

CYCLO® GEARMOTORS

	Page
1. How to Select	
Standard Specifications	B-3
Model Selection	B-4
Selection of Load Factor	B-7
Nomenclature	B-9
2. Selection Tables	B-13
3. Dimension Tables	B-97

B CYCLO® GEARMOTORS

1. HOW TO SELECT

Standard Specifications of Gearmotor

Motor

Items	Standard Specification			Standard Specification with Built-in Brake		
Capacity Range	0.1 - 55kW × 4P 15 - 55kW × 6P			0.1 - 30kW × 4P FB Brake (Non-Asbestors) 37kW × 4P ESB Brake *For 6P motor with brake, consult us.		
Enclosure	Totally enclosed fan cooled type (0.1kW × 4P totally enclosed non-ventilated)			Totally enclosed fan cooled type (0.1kW × 4P totally enclosed non-ventilated)		
Power Source	0.1 - 3.7kW:	220 - 240V	50Hz	0.1 - 3.7kW:	220 - 240V	50Hz
		220V	60Hz		220V	60Hz
		380 - 420V	50Hz		380 - 420V	50Hz
	5.5 - 55kW:	380 - 420V	50Hz	5.5 - 37kW:	380 - 420V	50Hz
		440V	60Hz		440V	60Hz
Thermal Class	F			F		
Time Rating	Continuous rating			Continuous rating		
Terminal Box Position & Lead Wire Direction	On the left side viewed from the load side. Regarding the draw out hole direction, refer to Table below.			On the left side viewed from the load side. Regarding the draw out hole direction, refer to Table below.		
Lead Wiring	6 Wires	4P	6P	8 Wires	4P	
		0.1~3.7kW (Direct starting)	-		0.1~3.7kW (Direct starting)	
		Note: 2 5.5~55kW (⅄-Δ starting vailable)	Note: 2 15~55kW (⅄-Δ starting vailable)		Note: 2 5.5~37kW (⅄-Δ starting vailable)	
Standards	Conforms to IEC.					

Reducer

Items	Specifications		
Model	CYCLO 6000 Series		CYCLO 6000SK Series
Lubrication Method	Grease lubricated and oil lubricated models available		Grease lubricated models available
Speed Reduction Method	Internal planetary gear mechanism with trochoidal curved tooth profile		Involute gear type
Direction of Output Shaft Rotation	Single reduction	Counter-clockwise rotation	clockwise rotation *Note that it is different from CYCLO 6000 series single reduction type
	Double reduction	Clockwise rotation	
	As observed from the load side when connected to R-U, S-V, T-W motors.		

Common to Motor and Reducer

Items		Specifications
Ambient Conditions	Installation location	Indoor or outdoor (Minimal dust and humidity)
	Ambient Temperature	-10°C ~ 40°C
	Ambient Humidity	Under 85%
	Elevation	Lower than 1,000 meters above sea level
	Atmosphere	Well ventilated location, free of corrosive gases, explosive gases, vapors, and dust.
Method of Mounting Note: 3		CHHM Type: Slow speed shaft in horizontal direction and with foot CHFM Type: Slow speed shaft in horizontal direction and with flange (not for 6000SK Series) CVVM Type: Slow speed shaft down in vertical direction and with V-flange *Models with "N" for the second nomenclature symbol (such as CNHM Type) may by mounted in any direction.
Method of Coupling with Driven Machine		Coupling, gears, chain sprocket or belt.
Painting		Type: Acrylic modified phtalic Color: Equivalent to Munsell 6.5PB 3.6/8.2.

Note: 1. Refer to the technical section (Page F-31~57) for motor specification other than standard one.
2. Consult us when ⅄-Δ start is necessary for non-standard voltage.
3. Models for universal mounting (types with N for the second digit of nomenclature) can be manufactured for following frame sizes only. Other frame sizes require indication for mounting direction.

[Frame sizes for universal mounting direction] *□ of the frame size indicates 0, 5, or H.
606□, 607□, 608□, 609□, 610□, 611□, 612□,
606□DA, 607□DA, 608□DA, 609□DA, 610□DA, 612□DA, 612□DB

Direction of Withdrawing Lead Wire

Main frame mounting direction	Standard
Horizontal Type (Slow speed shaft in horizontal direction)	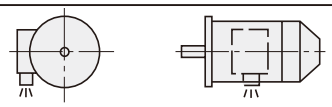
Vertical Type (Slow speed shaft in vertical direction)	

Note: Whenever not specified, the above direction shall be used. When the direction of withdrawal from the terminal box is other than specified above, refer to Page F-34.

Model Selection

Select models referring to the following flowchart. Consult us if there is any question.

Step 1: Determination of Operating Condition

Determine the following condition before starting selection.

- Application
- Continuous operation, or operation with frequent startup and stop
- Motor capacity (kW) and output speed or reduction ratio
- Radial load and axial load
- Operation hours per day
- Level of shock load
- Mounting direction (slow speed shaft direction), mounting shape
- Motor specification (power source frequency, voltage, with or without brake, etc.)
- Other ambient conditions (temperature, humidity, indoor or outdoor, and other environments)

* Refer to section "D. CYCLO® GEARMOTORS (WITH AF MOTOR FOR INVERTERS)" for gearmotors with inverter motors.

Step 2: Model Selection

	Procedure
Select load factor	- Select appropriate load factor from page B-7~8. Check allowable thermal capacity for motor in page B-9 if startup and stop is repeated during operation.
Select motor capacity	- Open the page with selection table for your motor capacity, starting from page B-13.
Select output speed and reduction ratio	- Select the cell containing close value to your output speed or reduction ratio in the selection table.
Check output torque $T_L \leq T_{OUT}$ (T_L: Load torque, T_{OUT}: Output torque)	- Check whether the output torque is sufficient for your usage. Raise motor capacity by one frame size if the output torque is not sufficient.
Determine gearmotor size Load factor ≤ SF of gearmotor	- Select combination with service factor (SF), which is larger than the load factor, from the selection table.

Step 3: Check

	Procedure
Is only the radial load applied on shaft? (NO / YES)	- Check whether only the radial load is applied on slow speed shaft. Refer to Technical Data starting at page F-10 and calculate if axial load is also applied.
Radial load position: Shaft midpoint Shock load: None → Check radial load	
Radial load position: Beyond shaft midpoint, or Shock load : Applied → Check radial or axial load with formulas on page F-10	- Refer to Technical Data starting at page F-10 depending on where the radial load is applied, or if any shock load is applied or not.
Is shaft values load within Allowable Radial load (Pro)? (NO → Raise one frame size or use heavy radial load type / YES)	- *1 Allowable radial load for slow speed shaft in the selection table is when the load position is at the midpoint of the shaft. *2 Calculate radial load including initial tension if they are applied using chain, V-belt, synchronous belt, etc. - Check whether the calculated radial load does not exceed allowable radial load of the slow speed shaft.
Check slow speed shaft direction, mounting, style, & hibrication	- Check whether the selected combination is sufficient for your slow speed shaft direction, mounting style, and lubrication method.
Check dimension	- Check whether the dimension is adequate. Consult us if it does not match your operation condition.
Check ambient condition (site environment)	- Check whether the selected combination is sufficient for your operation condition, such as surrounding environment. Refer to "Standard Specifications of Gearmotor" in page B-3 or section "F. Technical Data" for checking.
Check motor specification	- Check whether the selected motor is sufficient for your operation condition (power source, environment, thermal class, etc.).

Step 4: Nomenclature Determination, Selection Complete

	Procedure
Determine nomenclature and complete selection	- Determine nomenclature for selected model referring to "Nomenclature" in page B-10. Now, the selection process is complete.

Description of Our Selection Table

This is a brief desciption of our tables on page B-13 and after.

Motor capacity [kW]

Input speed [r/min] (Indicated for each motor frequency and number of poles.)

7.5 kW

n1: Motor Speed

Hz		50Hz		60Hz	
P		4	6	4	6
n1	r/min	1450	980	1750	1165

CHHM/CNHM

50Hz						60Hz						Nomenclature			
Output Speed n2 [r/min]	Output Torque Tout [N-m]	[kgf-m]	Allowable Radial Load Pro [N]	[kgf]	SF	Output Speed n2 [r/min]	Output Torque Tout [N-m]	[kgf-m]	Allowable Radial Load Pro [N]	[kgf]	SF	Input Capacity Symbol	- Frame Size	- Reduction Ratio	
			5980	**610**	**1.25**				**5650**	**576**	**1.25**	**10 -**	**6130**	**- 6**	
			5980	610	1.51				5650	576	1.51	10 -	6135	- 6	
242	282	28.7	9330	951	1.73	292	233	23.8	8830	901	1.73	10 -	6140	- 6	
			9330	951	2.01				8830	901	2.01	10 -	6145	- 6	
			10400	1070	2.71				9830	1000	2.71	10 -	6160	- 6	
			6650	**678**	**1.25**				**6290**	**641**	**1.25**	**10 -**	**6130**	**- 8**	
			6650	678	1.51				6290	641	1.51	10 -	6135	- 8	
181	375	38.3	10300	1050	1.73	219	311	31.7	9790	998	1.73	10 -	6140	- 8	
			10300	1050	2.01				9790	998	2.01	10 -	6145	- 8	
			11700	1190	2.63				11000	1120	2.63	10 -	6160	- 8	
			7570	**771**	**1.25**				**7150**	**729**	**1.25**	**10 -**	**6130**	**- 11**	**B**
			7570	771	1.51				7150	729	1.51	10 -	6135	- 11	B
132	516	52.6	11600	1180	1.73	159	428	43.6	11000	1120	1.73	10 -	6140	- 11	B
			11600	1180	2.01				11000	1120	2.01	10 -	6145	- 11	B
			13200	1350	2.63				12500	1270	2.63	10 -	6160	- 11	B
			7860	**801**	**1.25**				**7430**	**758**	**1.25**	**10 -**	**6130**	**- 13**	**B**
			7860	801	1.36				7430	758	1.51	10 -	6135	- 13	

Output speed [r/min]

Service factor

Input capacity symbol - Frame size - Reduction ratio

*Note that “reduction ratio = normal ratio” for models with “SK” at the end of frame size (6000 SK Series with “*3” on the side of reduction ratio).
(Indicated reduction ratio is the same as actual reduction ratios for other models.)

Selection Example

Below is an example selection process following the model selection procedure in page B-4.

•Operation condition

- Application: Chain conveyor
- Operation hours per day: 24 hours/day
- Operation pattern: Continuous operation
- Load capacity: 0.7kW
- Output speed: 33.7r/min
- Connection with application:
  Chain sprocket
  Initial tension = 0
  Sprocket pitch circle radius: R=61mm
  Load position: Midpoint of shaft
- Level of shock load: None
- Mounting direction (slow speed shaft direction), and mounting style:
  horizontal, foot mount
- Motor specification
  Electric frequency: 50Hz
  Voltage: 200V
  Brake: None
  Others: Indoor type
- Surrounding condition
  Ambient temperature 20°C for indoor use

The model is selected based on above operation conditions in this example.

Operation condition, selection, and calculation results	Reference pages
• **Select load factor** Load condition for chain conveyor application → Uniform load (U) Load factor = 1.2 (U, 24 hours/day operation)	Page B-7~9 Table B-2: Reducer Load Classification Table B-1: Reducer Load Factor
• **Select motor capacity** Load capacity=0.7kW → Motor capacity=0.75kW	Page A-7: Product Range of Motor
• **Select output speed** Power source frequency 50Hz, output speed 33.7r/min → 1450/33.7 = Reduction ratio 43	Page B-38: CYCLO® GEARMOTORS Selection Tables
• **Check output torque** $T_L = \frac{9550 \times 0.7(kw)}{1450} \times 43 = 199\ N{\cdot}m \leq 202N{\cdot}m \rightarrow OK$ T_L=Load torque	Page B-38: CYCLO® GEARMOTORS Selection Tables
• **Determine reducer frame size** Load factor = 1.2 ≤ 1.44 Reducer frame size & reduction ratio: 1-6105-43	Page B-38: CYCLO® GEARMOTORS Selection Tables
• **Check radial load** Pr = TL/R ≤ Pro/Cf Pr = 199(N·m)/0.061(m) = 3262(N) ≤ 5400(N)/1 = 5400(N) → OK	Page F-10: Allowable Radial and Axial Load
• **Check slow speed shaft direction, mounting style, lubrication method** Slow speed shaft direction: Horizontal, Mounting style: Foot mount → Nomenclature: CNHM (Grease lubrication method)	Page B-38: CYCLO® GEARMOTORS Selection Tables Page B-10: Nomenclature
• **Check dimension** Check dimension using Dimension Tables.	Page B-101: Dimension Tables
• **Check surrounding condition** Ambient temperature: 20°C → OK	Page B-3: Standard Specifications of Gearmotor
• **Check motor specification** 200V, 50Hz, for indoor use → OK with standard specificationn	Page A-7: Product Range of Motor
■**Determine nomenclature** Determine nomenclature: CNHM1-6105-43 The selection is complete.	Page B-10: Nomenclature

Selection of Load Factor

The Load Factor is rated for the characteristics of the driven machine.

The tabulated ratings are based on a running time of 10 hours per day with uniform load.
For your reference, please see method (1) and (2) shown below.

(1) Recommended Load Factor by the Driven Application.

[Load Factor] U: Uniform load M: Moderate shock H: Heavy shock

Table B-1 Reducer Load Factor

Daily duty	~3 hours/day			~10 hours/day			~24 hours/day		
	U	M	H	U	M	H	U	M	H
Load Factor	0.80	1.00	1.35	1.00	1.20	1.50	1.20	1.35	1.60

Table B-2 Recommended Load Classifications

Type of APPLICATION	Type of LOAD
*Aerator	
Agitators.	
pure liquids	U
liquids & solids	M
liquids-variable density	M
Blowers	
centrifugal	U
lobe	M
vane	U
Brewing & Distilling	
bottling machinery	U
brew kettles, cont. duty	U
cookers-cont. duty	U
mash tubs-cont. duty	U
scale hopper, frequent starts	M
Can Filling Machines	U
*Cane Knives	M
Car Dumpers	H
Car Pullers	M
Clarifiers	U
Classifiers	M
Clay Working Machinery	
brick press	H
briquette machine	H
clay working machinery	M
pug mill	M
Compressors	
centrifugal	U
lobe	M
reciprocating, multi-cylinder	M
reciprocating, single-cylinder	H
Conveyors-Uniformly Loaded or Fed	
apron	U
assembly	U
belt	U
bucket	U
chain	U
flight	U
oven	U
screw	U
Conveyors-Heavy Duty Not Uniformly Fed	
apron	M
assembly	M
belt	M
bucket	M
chain	M
flight	M
*live roll	
oven	M
reciprocating	H
screw	M
shaker	H
Cranes (Except for Dry Dock Cranes)	
main hoists	
*bridge travel	
*trolley travel	
Crusher	
ore	H
stone	H
**sugar	M
Dredges	
cable reels	M
conveyors	M
cutter head drives	H
jig drives	H
maneuvering winches	M
pumps	M
screen drive	H
stackers	M
utility winches	M
*Dry Dock Cranes	
Elevators	
bucket - uniform load	U
bucket - heavy load	M
bucket - cont.	U
centrifugal discharge	U
escalators	U
freight	M
gravity discharge	U
*man lifts	
*passenger	
**Extruders (Plastics)	
blow molders	M
coating	U
film	U
pipe	U
pre-plasticizers	M
rods	U
sheet	U
tubing	U
Fans	
centrifugal	U
*cooling towers	
induced draft	U
*forced draft	
induced draft	M
large (mine, etc.)	M
large (industrial)	M
light (small diameter)	U
Feeders	
apron	M
belt	M
disc	U
reciprocating	H
screw	M
Food industry	
beet slicer	M
cereal cooker	U
dough mixer	M
meat grinders	M
Generators (not welding)	U
Hammer mills	H
Hoists	
heavy duty	H
medium duty	M
skip hoist	M
Laundry Washers	
reversing	M
Laundry Tumblers	M
Line Shaft	
driving processing equipment	M
light	U
other line shafts	U
Lumber Industry	
barkers-hydraulic-mechanical	H
burner conveyor	M
chain saw & drag saw	H
chain transfer	H
craneway transfer	H
de-barking drum	H
edger feed	M
gang feed	H
green chain	M
live rolls	H
log haul-locline	H
log haul-well type	H
log turning device	H
main log conveyor	H
off bearing rolls	M
planer feed chains	M
planer floor chains	M
planer tilting hoist	M
re-saw merry- go-round conveyor	M
roll cases	H
slab conveyor	H
small waste-conveyor-belt	U
small waste-conveyor-chain	M
sorting table	M
tipple hoist conveyor	M
tipple hoist drive	M
transfer conveyors	M
transfer rolls	M
tray drive	M
trimmer feed	M
waste conveyor	M
Machine Tools	
bending roll	M
punch press-gear driven	H
*notching press-belt driven	
plate planers	H
tapping machine	H
other machine tools	
main drives	M
auxiliary drives	U
Metal Mills	
draw bench carriage & main drive	M
forming machines	H
*pinch, dryer & scrubber rolls, reversing	
slitters	M
table conveyors-non-reversing group drives	M
individual drives	H
*table conveyors-reversing	
wire drawing & flattening machine	M
wire winding machine	M
Mills, Rotary Type	
**ball	M
**cement kilns	M
**dryers & coolers	M
kilns	M
**pebble	M
**rod , plain & wedge bar	M
tumbling barrels	H
Mixers	
concrete mixers, cont.	M
concrete mixers, intermittent	M
constant density	U
variable density	M
Oil Industry	
chillers	M
*oil well pumping	
paraffin filter press	M
rotary kilns	M
Paper Mills	
agitators (mixers)	M
barker-auxiliaries-hydraulic	M
barker-mechanical	M
barking drum	H
beater & pulper	M
bleacher	U
calendars	M
calendars-super	H
converting machine, except cutters, platers	M
conveyors	U
couch	M
cutters-platers	H
cylinders	M
dryers	M
Paper Mills	
felt stretcher	M
felt whipper	H
jordans	H
log haul	H
presses	U
pulp machine reel	M
stock chests	M
suction roll	U
washers & thickeners	M
winders	U
*Printing Presses	
Pullers	
barge haul	H
Pumps	
centrifugal	U
proportioning	M
reciprocating single acting, 3 or more cylinders	M
double acting, 2 or more cylinders	M
*single acting, 1 or 2 cylinders	
*double acting, single cylinder	
rotary-gear type	U
rotary-lobe, vane	U
Rubber & Plastics Industries	
**crackers	H
laboratory equipment	M
**mixing mills	H
**refiners	M
**rubber calendars	M
**rubber mill (2 on line)	M
**rubber mill (3 on line)	U
**sheeter	M
*tire building machines	
*tire & tube press openers	
**tubers & strainers	M
**warming mills	M
Sand Muller	M
Screens	
air washing	U
rotary-stone or gravel	M
traveling water intake	U
Sewage Disposal Equipment	
bar screens	U
chemical feeders	U
collectors, circuline or straightline	U
dewatering screws	M
grit collectors	U
scum breakers	M
slow or rapid mixers	M
sludge collectors	U
thickeners	M
vacuum filters	M
Slab Pushers	M
*Steering Gear	
Stokers	U
Sugar Industry	
**cane knives	M
**crushers	M
**mills	H
Textile Industry	
batchers	M
calendars	M
cards	M
dry cans.	M
dryers	M
dyeing machinery	M
*knitting machines	
looms	M
mangles	M
nappers	M
pads	M
*range drives	
slashers	M
soapers	M
spinners	M
tenter frames	M
washers	M
winders	M
*Windlass	

Remarks: * Refer to factory. ** To be selected on basis of 24hr. service only.

Note: Table above contains reference value. Names and mechanical characteristics of the actual machine may differ from the table above.

Selection of Load Factor

(2) Recommended Load Factor Modifications for Frequent Start-Stop Operation

Please see table B-3 and B-4.

Table B-3 Number of Starts-Stops and Load Factor

Number of starts-stops [times/hour]	~3 hours/day			~10 hours/day			~24 hours/day		
	I	II	III	I	II	III	I	II	III
~10	0.80	1.00	1.20	1.00	1.10	1.35	1.20	1.25	1.50
~200	0.85	1.10	1.30	1.10	1.30	1.50	1.25	1.50	1.65
~500	0.90	1.20	1.40	1.15	1.45	1.60	1.30	1.60	1.75

$$\text{The ratio of Moment of Inertia (The ratio of GD}^2\text{)} = \frac{\text{Total Moment of Inertia (GD}^2\text{) as seen from the motor shaft}}{\text{Moment of Inertia (GD}^2\text{) of motor}}$$

Load Factor
1: Allowable ratio of Moment of Inertia (GD^2) ≤ 0.3
2: Allowable ratio of Moment of Inertia (GD^2) ≤ 3
3: Allowable ratio of Moment of Inertia (GD^2) ≤ 10

Note: 1. The number of starts-stops includes brake or clutch operation times.
2. Consult us when starting under loaded conditions.
3. Consult us when start-stop frequency exceeds 500 times/hour. Brake for high frequency use may be necessary.

Table B-4 MOTOR THERMAL RATING (C × Z)

Motor Power [kW]	Allowable C × Z				Motor moment of inertia kg·m²		Motor GD² kgf·m²	
	(35%ED)	(35%ED~50%ED)	(50%ED~80%ED)	(80%ED~100%ED)	Standard	With brake	Standard	With brake
0.1	3200	3000	2000	1200	0.00033	0.00035	0.0013	0.0014
0.2	2200	2800	2800	2500	0.00050	0.00055	0.002	0.0022
0.25	2200	2800	2800	2500	0.00050	0.00055	0.002	0.0022
0.4	1800	2200	1500	1500	0.00065	0.00068	0.0026	0.0027
0.55	1800	2200	1500	1500	0.00101	0.00111	0.00405	0.00445
0.75	1400	1400	800	500	0.00120	0.00130	0.0048	0.0052
1.1	1400	1400	800	500	0.00185	0.00208	0.0074	0.0083
1.5	1200	1200	500	400	0.00213	0.00235	0.0085	0.0094
2.2	1000	900	400	200	0.00333	0.00373	0.0133	0.0149
3.0	1000	900	400	200	0.00700	0.00810	0.0281	0.0325
3.7	800	800	800	700	0.00848	0.00958	0.0339	0.0383
5.5	300	300	200	150	0.01143	0.01253	0.0457	0.0501
7.5	400	350	300	300	0.02675	0.03025	0.1070	0.121
11	200	200	150	150	0.03750	0.04100	0.1500	0.164

C × Z calculated by below steps (1) ~ (3) must be less than allowable C × Z listed in Table B-4.

(1) Caluculate C from formula below.

[SI units] $$C = \frac{J_M + J_L}{J_M}$$

J_M; Moment of inertia of motor [kg·m²]
J_L; Total moment of inertia (excluding motor) at motor shaft [kg·m²]

[Gravitational units] $$C = \frac{GD_M^2 + GD_L^2}{GD_M^2}$$

GD_M^2; GD^2 of motor [kgf·m²]
GD_L^2; Total GD^2 (excluding motor) at motor shaft [kgf·m²]

Continues to the next page.

Selection of Load Factor

(2) Caluculate Z (number of startup times/hour).

(a) Assume that one operating period consists of "on time t_a [sec]" and "off time t_b [sec]" and the motor is started n_r [times/cycle].

$$Z_r = \frac{3600n_r}{t_a + t_b} \text{ [times/hr]}$$

(b) When inching, ni [times/cycle] is included in 1 cycle (t_a+t_b), the number of inching times per hour Z_i, and then included in the number of starts.

$$Z_i = \frac{3600n_r}{t_a + t_b} \text{ [times/hr]}$$

(c) Calculate Z [times/hr] by (a) and (b).

$$Z = Z_r + \frac{1}{2} Z_r = \frac{3600n_r}{t_a + t_b} \cdot (n_r + \frac{1}{2} n_i) \quad \text{[times/hr]}$$

(3) Calculate C multiplied by Z.

Use the C obtained in step (1) and Z in step (2).

(4) Obtain the duty cycle %ED and check with table above.

$$\%ED = \frac{t_a}{t_a + t_b} \times 100$$

Nomenclatue

Slow Speed Shaft Direction	
Horizontal, slow speed shaft level	H
Vertical, slow speed shaft down	V
Verticaly, slow speed shaft up	W
Universal mounting	N

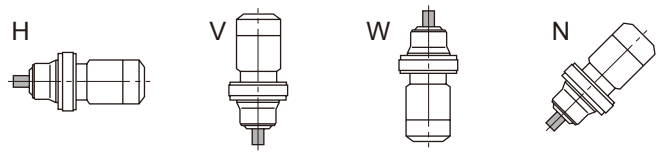

Mounting style	
Foot	H
V flange	V
Flange	F

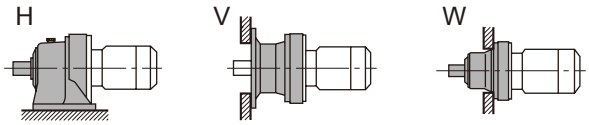

Type of Input	
Gearmotor	M
With adaptor	JM

Special Specifications	
Standard specification	blank
Special specification	S

Motor Capacity Symbol

4P	Capacity symbol	01	02	03	05	08	1
	kW (HP)	0.1 (1/8)	0.2 (1/4)	0.25 (1/3)	0.4 (1/2)	0.55 (3/4)	0.75 (1)
	Capacity symbol	1H	2	3	4	5	8
	kW (HP)	1.1 (1.5)	1.5 (2)	2.2 (3)	3.0 (4)	3.7 (5)	5.5 (7.5)
	Capacity symbol	10	15	20	25	30	40
	kW (HP)	7.5 (10)	11 (15)	15 (20)	18.5 (25)	22 (30)	30 (40)
	Capacity symbol	50	60	75	100		
	kW (HP)	37 (50)	45 (60)	55 (75)	75 (100)		
6P	Capacity symbol	016	026	036	056	086	16
	kW (HP)	0.1 (1/8)	0.2 (1/4)	0.25 (1/3)	0.4 (1/2)	0.55 (3/4)	0.75 (1)
	Capacity symbol	1H6	26	36	46	56	86
	kW (HP)	1.1 (1.5)	1.5 (2)	2.2 (3)	3.0 (4)	3.7 (5)	5.5 (7.5)
	Capacity symbol	106	156	206	256	306	406
	kW (HP)	7.5 (10)	11 (15)	15 (20)	18.5 (25)	22 (30)	30 (40)
	Capacity symbol	506	606	756	1006	1256	1506
	kW (HP)	37 (50)	45 (60)	55 (75)	75 (100)	90 (125)	110 (150)
	Capacity symbol	1756					
	kW (HP)	132 (175)					

Shaft specification	
Metric JIS (Standard)	-
Inch size	Y
Metric DIN	G

Suffix			
Standard	-	Low Backlash	LB
High Capacity Bearing	R1	With AF (inverter) motor	AV
High Cap. Brg. Ductile Casing	R2	Servo Motor	SV
Baseplate	BP	DC Motor	DV
HH Type Ceiling	H1	High Efficency Motor	ES
Modification Left Wall	H2	Torque Limiter	TL
Modification Right Wall	H3		

Frame size (Refer to Selection Tables starting from page B-13.)

With or Without Brake	
Without brake	-
With brake	B

Nominal ratio

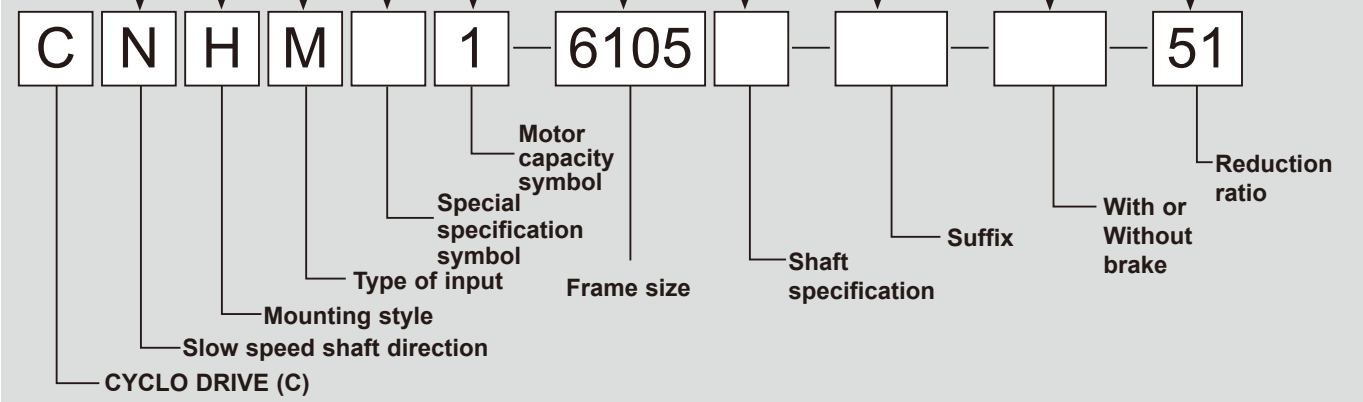

Nomenclature and Product Examples

Nomenclature Examples (Gearmotor)

Example 1.
CNHM2 - 6115 - 29

C:	Model	- CYCLO® DRIVE
N:	Slow speed shaft direction	- Universal direction
H:	Mounting style	- Foot
M:	Type of input	- Gearmotor type
2:	Motor capacity	- 1.5kW
6115:	Frame size	- 6115
29:	Reduction ratio	- 29

Example 2.
CVVM5 - 6195DA - B - 377

C:	Model	- CYCLO® DRIVE
V:	Slow speed shaft direction	- Vertical mounting
V:	Mounting style	- V flange
M:	Type of input	- Gearmotor type
5:	Motor capacity	- 3.7kW
6195DA:	Frame size	- 6195DA
B:	Brake	- With brake
377:	Reduction ratio	- 377

Product and Nomenclature Symbol Examples (Gearmotor)

Standard and various application products of CYCLO® GEARMOTOR are classified by their nomenclature symbol as below.
Refer to specific catalogs or consult us for details on our application products.

CYCLO® GEARMOTOR

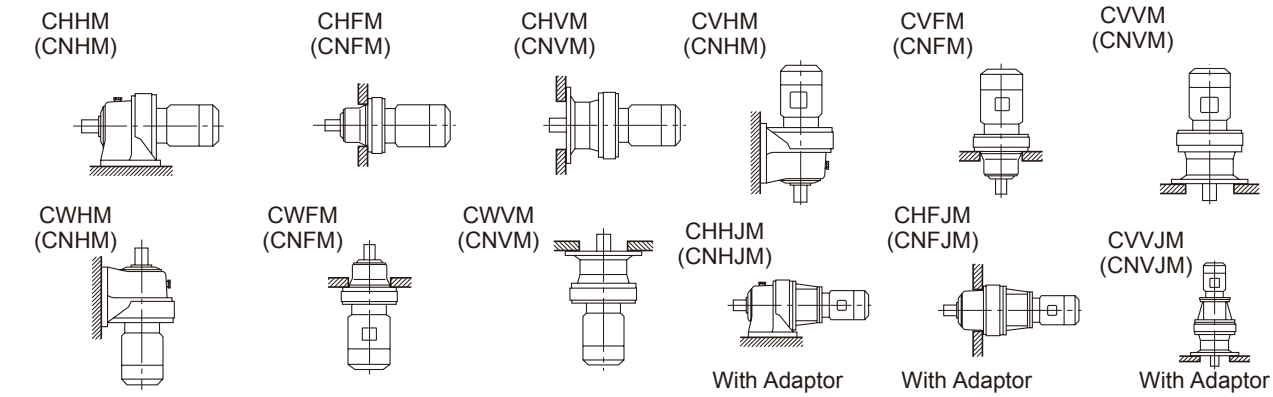

CYCLO® GEARMOTOR Application Products

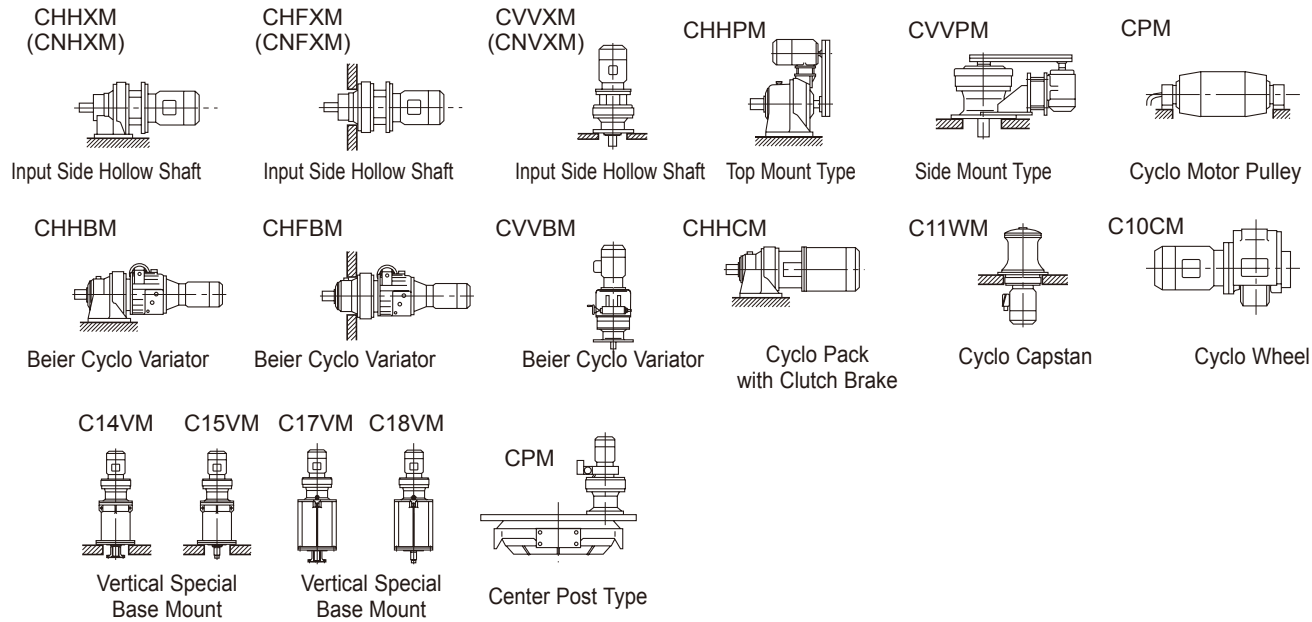

M E M O

B CYCLO® GEARMOTORS

2. Selection Tables

Selection Tables Gearmotors

n_1: Motor Speed

0.1 kW	Hz	50Hz		60Hz	
	P	4	6	4	6
	n_1 r/min	1450	980	1750	1165

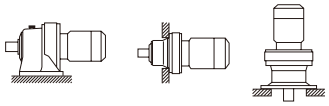

CHHM/CNHM CHFM/CNFM CVVM/CNVM

50Hz						60Hz						Nomenclature				Page of Dimension Sheet		
Output Speed n_2 [r/min]	Output Torque Tout [N·m]	[kgf·m]	Allowable Radial Load Pro [N]	[kgf]	SF	Output Speed n_2 [r/min]	Output Torque Tout [N·m]	[kgf·m]	Allowable Radial Load Pro [N]	[kgf]	SF	Input Capacity Symbol	- Frame Size	-	Reduction Ratio	CNHM CHHM	CNFM CHFM	CNVM CVVM
242	3.75	0.383	804	82.0	2.00	292	3.11	0.317	756	77.1	2.00	01	6060		6	B-100	B-116	B-135
			804	82.0	2.86				756	77.1	2.86	01	6065		6	B-100	B-116	B-135
181	5.01	0.510	921	94	2.00	219	4.15	0.423	866	88	2.00	01	6060		8	B-100	B-116	B-135
			921	94	2.86				866	88	2.86	01	6065		8	B-100	B-116	B-135
132	6.88	0.702	1180	120	2.00	159	5.70	0.581	1180	120	2.00	01	6060		11	B-100	B-116	B-135
			1180	120	2.86				1180	120	2.86	01	6065		11	B-100	B-116	B-135
112	8.1	0.83	1180	120	2.00	135	6.7	0.69	1180	120	2.00	01	6060		13	B-100	B-116	B-135
			1180	120	2.86				1180	120	2.86	01	6065		13	B-100	B-116	B-135
96.7	9.4	0.96	1180	120	2.00	117	7.8	0.79	1180	120	2.00	01	6060		15	B-100	B-116	B-135
			1180	120	2.86				1180	120	2.86	01	6065		15	B-100	B-116	B-135
85.3	10.6	1.08	1180	120	2.00	103	8.8	0.90	1180	120	2.00	01	6060		17	B-100	B-116	B-135
			1180	120	2.82				1180	120	2.86	01	6065		17	B-100	B-116	B-135
69.0	13.1	1.34	1180	120	1.83	83.3	10.9	1.11	1180	120	2.00	01	6060		21	B-100	B-116	B-135
			1180	120	2.28				1180	120	2.34	01	6065		21	B-100	B-116	B-135
58.0	15.6	1.59	**1180**	**120**	**1.10**	70.0	13.0	1.32	**1180**	**120**	**1.10**	**01**	**6060**		**25**	**B-100**	**B-116**	**B-135**
			1180	120	1.66				1180	120	1.66	01	6065		25	B-100	B-116	B-135
			1770	180	2.30				1770	180	2.30	01	6070		25	B-100	B-116	B-135
			1770	180	2.94				1770	180	2.94	01	6075		25	B-100	B-116	B-135
50.0	18.1	1.85	**1180**	**120**	**1.10**	60.3	15.0	1.53	**1180**	**120**	**1.10**	**01**	**6060**		**29**	**B-100**	**B-116**	**B-135**
			1180	120	1.65				1180	120	1.66	01	6065		29	B-100	B-116	B-135
			1770	180	2.26				1770	180	2.26	01	6070		29	B-100	B-116	B-135
			1770	180	2.86				1770	180	2.86	01	6075		29	B-100	B-116	B-135
41.4	21.9	2.23	**1180**	**120**	**1.10**	50.0	18.1	1.85	**1180**	**120**	**1.10**	**01**	**6060**		**35**	**B-100**	**B-116**	**B-135**
			1180	120	1.37				1180	120	1.43	01	6065		35	B-100	B-116	B-135
			1770	180	2.05				1770	180	2.11	01	6070		35	B-100	B-116	B-135
			1770	180	2.72				1770	180	2.79	01	6075		35	B-100	B-116	B-135
			2560	261	2.90				2560	261	3.29	01	6080		35	B-100	B-116	B-135
33.7	26.9	2.74	**1180**	**120**	**1.12**	40.7	22.3	2.27	**1180**	**120**	**1.13**	**01**	**6065**		**43**	**B-100**	**B-116**	**B-135**
			1770	180	1.67				1770	180	1.70	01	6070		43	B-100	B-116	B-135
			1770	180	2.23				1770	180	2.26	01	6075		43	B-100	B-116	B-135
			2560	261	2.50				2560	261	2.50	01	6080		43	B-100	B-116	B-135
			2560	261	2.94				2560	261	2.94	01	6085		43	B-100	B-116	B-135
28.4	31.9	3.25	**1770**	**180**	**1.00**	34.3	26.4	2.70	**1770**	**180**	**1.00**	**01**	**6070**		**51**	**B-100**	**B-116**	**B-135**
			1770	180	1.43				1770	180	1.43	01	6075		51	B-100	B-116	B-135
			2560	261	1.92				2560	261	1.92	01	6080		51	B-100	B-116	B-135
			2560	261	2.41				2560	261	2.41	01	6085		51	B-100	B-116	B-135
24.6	36.9	3.76	**1770**	**180**	**1.00**	30.0	30.6	3.12	**1770**	**180**	**1.00**	**01**	**6070**		**59**	**B-100**	**B-116**	**B-135**
			1770	180	1.36				1770	180	1.36	01	6075		59	B-100	B-116	B-135
			2560	261	1.85				2560	261	1.85	01	6080		59	B-100	B-116	B-135
			2560	261	2.34				2560	261	2.34	01	6085		59	B-100	B-116	B-135
20.4	44.4	4.53	**2560**	**261**	**1.20**	24.6	36.8	3.75	**2560**	**261**	**1.20**	**01**	**6080**		**71**	**B-100**	**B-116**	**B-135**
			2560	261	1.65				2560	261	1.87	01	6085		71	B-100	B-116	B-135
			3340	340	2.52				3340	340	2.52	01	6090		71	B-100	B-116	B-135
			3340	340	2.78				3340	340	3.01	01	6095		71	B-100	B-116	B-135
16.7	54.4	5.55	**2560**	**261**	**1.21**	20.0	45.10	4.600	**2560**	**261**	**1.21**	**01**	**6085**		**87**	**B-100**	**B-116**	**B-135**
			3340	340	2.11				3340	340	2.11	01	6090		87	B-100	B-116	B-135
			3340	340	2.63				3340	340	3.01	01	6095		87	B-100	B-116	B-135
13.9	24.0	2.45	1180	120	*	16.8	24.0	2.45	1180	120	*	01	6060DA		104	B-108	B-124	B-143
	30.0	3.06	1180	120	*		30.0	3.06	1180	120	*	01	6065DA		104	B-108	B-124	B-143
	45.0	4.59	1770	180	*		45.0	4.59	1770	180	*	01	6070DA		104	B-108	B-124	B-143
			1770	180	0.97				1770	180	1.17	01	6075DA		104	B-108	B-124	B-143
	61.6	6.28	3340	340	2.43		51.1	5.21	3340	340	2.94	01	6090DA		104	B-108	B-124	B-143
			3340	340	2.93				3340	340	3.54	01	6095DA		104	B-108	B-124	B-143

1. Combinations in **bold** are the recommended models for operations for 10 hours/day with uniform load (service factor is about 1.0 for motor rating at 50Hz).
2. Motor slippage may affect n_1 and n_2. Refer to technical data for details.
3. CNHM, CHHM, CNFM, CHFM, CNVM, and CVVM indicate types. Refer to page B-10 for details.
4. Lubrication method is different for each model. Refer to "Lubrication" section in page F-4~F-5 for details.
5. "6" at the end of "input capacity symbol" indicates models with 6P motor. Other models come with 4P motor.

Selection Tables Gearmotors

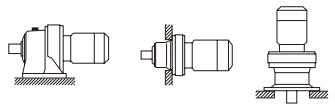

n_1: Motor Speed

0.1 kW	Hz	50Hz		60Hz	
	P	4	6	4	6
	n_1 r/min	1450	980	1750	1165

50Hz						60Hz						Nomenclature				Page of Dimension Sheet		
Output Speed n_2 [r/min]	Output Torque Tout [N·m]	[kgf·m]	Allowable Radial Load Pro [N]	[kgf]	SF	Output Speed n_2 [r/min]	Output Torque Tout [N·m]	[kgf·m]	Allowable Radial Load Pro [N]	[kgf]	SF	Input Capacity Symbol	– Frame Size	– Reduction Ratio		CNHM CHHM	CNFM CHFM	CNVM CVVM
12.2	74.5	7.59	**3340**	**340**	**1.25**	14.7	61.7	6.29	**3340**	**340**	**1.25**	**01**	**- 6090**	**- 119**		**B-100**	**B-116**	**B-135**
			3340	340	1.45				3340	340	1.51	01	- 6095	- 119		B-100	B-116	B-135
12.0	24.0	2.45	1180	120	*	14.5	24.0	2.45	1180	120	*	01	- 6060DA	- 121		B-108	B-124	B-143
	30.0	3.06	1140	116	*		30.0	3.06	1140	116	*	01	- 6065DA	- 121		B-108	B-124	B-143
	45.0	4.59	1770	180	*		45.0	4.59	1770	180	*	01	- 6070DA	- 121		B-108	B-124	B-143
	50.8	5.18	1770	180	*		50.8	5.18	1770	180	*	01	- 6075DA	- 121		B-108	B-124	B-143
	71.7	7.31	3340	340	2.09		59.4	6.06	3340	340	2.52	01	- 6090DA	- 121		B-108	B-124	B-143
			3340	340	2.24				3340	340	2.70	01	- 6095DA	- 121		B-108	B-124	B-143
10.1	24.0	2.45	1180	120	*	12.2	24.0	2.45	1180	120	*	01	- 6060DA	- 143		B-108	B-124	B-143
	30.0	3.06	1180	120	*		30.0	3.06	1180	120	*	01	- 6065DA	- 143		B-108	B-124	B-143
	45.0	4.59	1770	180	*		45.0	4.59	1770	180	*	01	- 6070DA	- 143		B-108	B-124	B-143
	60.0	6.12	1770	180	*		60.0	6.12	1770	180	*	01	- 6075DA	- 143		B-108	B-124	B-143
	84.8	8.64	3340	340	1.77		70.2	7.16	3340	340	2.14	01	- 6090DA	- 143		B-108	B-124	B-143
			3340	340	2.16				3340	340	2.61	01	- 6095DA	- 143		B-108	B-124	B-143
			5400	550	2.95				5400	550	3.56	01	- 6100DA	- 143		B-108	B-124	B-143
8.79	24.0	2.45	1180	120	*	10.6	24.0	2.45	1180	120	*	01	- 6060DA	- 165		B-108	B-124	B-143
	30.0	3.06	1180	120	*		30.0	3.06	1180	120	*	01	- 6065DA	- 165		B-108	B-124	B-143
	45.0	4.59	1770	180	*		45.0	4.59	1770	180	*	01	- 6070DA	- 165		B-108	B-124	B-143
	60.0	6.12	1770	180	*		60.0	6.12	1770	180	*	01	- 6075DA	- 165		B-108	B-124	B-143
	97.8	9.97	3340	340	1.53		81.0	8.26	3340	340	1.85	01	- 6090DA	- 165		B-108	B-124	B-143
			3340	340	2.04				3340	340	2.47	01	- 6095DA	- 165		B-108	B-124	B-143
			5400	550	2.56				5400	550	3.08	01	- 6100DA	- 165		B-108	B-124	B-143
7.44	24.0	2.45	1180	120	*	8.97	24.0	2.45	1180	120	*	01	- 6060DA	- 195		B-108	B-124	B-143
	30.0	3.06	1180	120	*		30.0	3.06	1180	120	*	01	- 6065DA	- 195		B-108	B-124	B-143
	45.0	4.59	1770	180	*		45.0	4.59	1770	180	*	01	- 6070DA	- 195		B-108	B-124	B-143
	60.0	6.12	1770	180	*		60.0	6.12	1770	180	*	01	- 6075DA	- 195		B-108	B-124	B-143
	116	11.8	3340	340	1.30		95.8	9.76	3340	340	1.57	01	- 6090DA	- 195		B-108	B-124	B-143
			3340	340	1.73				3340	340	2.09	01	- 6095DA	- 195		B-108	B-124	B-143
			5400	550	2.16				5400	550	2.61	01	- 6100DA	- 195		B-108	B-124	B-143
			5400	550	2.60				5400	550	3.13	01	- 6105DA	- 195		B-108	B-124	B-143
6.28	24.0	2.45	1180	120	*	7.58	24.0	2.45	1180	120	*	01	- 6060DA	- 231		B-108	B-124	B-143
	30.0	3.06	1180	120	*		30.0	3.06	1180	120	*	01	- 6065DA	- 231		B-108	B-124	B-143
	45.0	4.59	1770	180	*		45.0	4.59	1770	180	*	01	- 6070DA	- 231		B-108	B-124	B-143
	60.0	6.12	1770	180	*		60.0	6.12	1770	180	*	01	- 6075DA	- 231		B-108	B-124	B-143
	137	14.0	3340	340	1.10		113	11.6	3340	340	1.32	01	- 6090DA	- 231		B-108	B-124	B-143
			3340	340	1.46				3340	340	1.76	01	- 6095DA	- 231		B-108	B-124	B-143
			5400	550	1.83				5400	550	2.20	01	- 6100DA	- 231		B-108	B-124	B-143
			5400	550	2.19				5400	550	2.64	01	- 6105DA	- 231		B-108	B-124	B-143
5.31	24.0	2.45	1180	120	*	6.41	24.0	2.45	1180	120	*	01	- 6060DA	- 273		B-108	B-124	B-143
	30.0	3.06	1180	120	*		30.0	3.06	1180	120	*	01	- 6065DA	- 273		B-108	B-124	B-143
	45.0	4.59	1770	180	*		45.0	4.59	1770	180	*	01	- 6070DA	- 273		B-108	B-124	B-143
	60.0	6.12	1770	180	*		60.0	6.12	1770	180	*	01	- 6075DA	- 273		B-108	B-124	B-143
	162	16.5	3340	340	1.24		134	13.7	3340	340	1.49	01	- 6095DA	- 273		B-108	B-124	B-143
			5400	550	1.54				5400	550	1.86	01	- 6100DA	- 273		B-108	B-124	B-143
			5400	550	1.85				5400	550	2.24	01	- 6105DA	- 273		B-108	B-124	B-143

6. "☆" indicates models manufactured with reducer and motor separately mounted on a common baseplate (horizontal shaft direction) or on an adaptor (vertical shaft direction). Consult us for details, including dimensions.
7. Allowable radial load (Pro) is the value at the midpoint of the slow speed shaft.
8. "(K)" indicates models with reduction ratios equal to nominal ratio. Refer to Table A-3 "6000SK Series (Actual Reduction Ratio)" on page A-4 for actual reduction ratio. Indicated reduction ratio is the same as actual reduction ratio for other models.
9. Maintain torque load during operation within "Output torque" in the table for models with "*" in the SF column. They cannot be operated with 100% motor rating.

Selection Tables Gearmotors

n_1: Motor Speed

0.1 kW	Hz	50Hz		60Hz	
	P	4	6	4	6
	n_1 r/min	1450	980	1750	1165

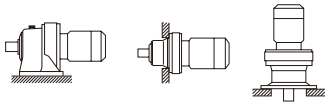

CHHM/CNHM CHFM/CNFM CVVM/CNVM

50Hz						60Hz						Nomenclature	Page of Dimension Sheet		
Output Speed n_2 [r/min]	Output Torque Tout [N·m]	[kgf·m]	Allowable Radial Load Pro [N]	[kgf]	SF	Output Speed n_2 [r/min]	Output Torque Tout [N·m]	[kgf·m]	Allowable Radial Load Pro [N]	[kgf]	SF	Input Capacity Symbol - Frame Size - Reduction Ratio	CNHM CHHM	CNFM CHFM	CNVM CVVM
	24.0	2.45	1180	120	*		24.0	2.45	1180	120	*	01 - 6060DA - 319	B-108	B-124	B-143
	30.0	3.06	1180	120	*		30.0	3.06	1180	120	*	01 - 6065DA - 319	B-108	B-124	B-143
	45.0	4.59	1770	180	*		45.0	4.59	1770	180	*	01 - 6070DA - 319	B-108	B-124	B-143
	60.0	6.12	1770	180	*		60.0	6.12	1770	180	*	01 - 6075DA - 319	B-108	B-124	B-143
4.55	150	15.3	3290	336	*	5.49	150	15.3	3290	336	*	01 - 6090DA - 319	B-108	B-124	B-143
			3220	**328**	**1.06**				**3280**	**334**	**1.28**	**01 - 6095DA - 319**	**B-108**	**B-124**	**B-143**
	189	19.3	5400	550	1.32		157	16.0	5400	550	1.60	01 - 6100DA - 319	B-108	B-124	B-143
			5400	550	1.59				5400	550	1.91	01 - 6105DA - 319	B-108	B-124	B-143
			9810	1000	2.75				9810	1000	3.32	01 - 6120DA - 319	B-108	B-124	B-143
	24.0	2.45	1180	120	*		24.0	2.45	1180	120	*	01 - 6060DA - 377	B-108	B-124	B-143
	30.0	3.06	1180	120	*		30.0	3.06	1180	120	*	01 - 6065DA - 377	B-108	B-124	B-143
	45.0	4.59	1770	180	*		45.0	4.59	1770	180	*	01 - 6070DA - 377	B-108	B-124	B-143
	60.0	6.12	1770	180	*		60.0	6.12	1770	180	*	01 - 6075DA - 377	B-108	B-124	B-143
	150	15.3	3290	336	*		150	15.3	3290	336	*	01 - 6090DA - 377	B-108	B-124	B-143
3.85			3150	321	0.89	4.64			3230	329	1.08	01 - 6095DA - 377	B-108	B-124	B-143
			5400	550	1.12				5400	550	1.35	01 - 6100DA - 377	B-108	B-124	B-143
	223	22.8	5400	550	1.34		185	18.9	5400	550	1.62	01 - 6105DA - 377	B-108	B-124	B-143
			9810	1000	2.33				9810	1000	2.81	01 - 6120DA - 377	B-108	B-124	B-143
			9810	1000	2.33				9810	1000	2.81	01 - 6120DB - 377	B-108	B-124	B-143
			9810	1000	2.82				9810	1000	3.40	01 - 6125DA - 377	B-108	B-124	B-143
	24.0	2.45	1180	120	*		24.0	2.45	1180	120	*	01 - 6060DA - 473	B-108	B-124	B-143
	30.0	3.06	1180	120	*		30.0	3.06	1180	120	*	01 - 6065DA - 473	B-108	B-124	B-143
	45.0	4.59	1770	180	*		45.0	4.59	1770	180	*	01 - 6070DA - 473	B-108	B-124	B-143
	60.0	6.12	1660	169	*		60.0	6.12	1660	169	*	01 - 6075DA - 473	B-108	B-124	B-143
3.07	150	15.3	3310	338	*	3.70	150	15.3	3310	338	*	01 - 6090DA - 473	B-108	B-124	B-143
	200	20.4	3220	328	*		200	20.4	3220	328	*	01 - 6095DA - 473	B-108	B-124	B-143
			5400	**550**	**1.07**				**5400**	**550**	**1.29**	**01 - 6105DA - 473**	**B-108**	**B-124**	**B-143**
	280	28.6	9810	1000	1.87		232	23.7	9810	1000	2.26	01 - 6120DA - 473	B-108	B-124	B-143
			9810	1000	2.25				9810	1000	2.71	01 - 6125DA - 473	B-108	B-124	B-143
	24.0	2.45	1180	120	*		24.0	2.45	1180	120	*	01 - 6060DA - 559	B-108	B-124	B-143
	30.0	3.06	1180	120	*		30.0	3.06	1180	120	*	01 - 6065DA - 559	B-108	B-124	B-143
	45.0	4.59	1770	180	*		45.0	4.59	1770	180	*	01 - 6070DA - 559	B-108	B-124	B-143
	60.0	6.12	1660	169	*		60.0	6.12	1660	169	*	01 - 6075DA - 559	B-108	B-124	B-143
2.59	150	15.3	3310	338	*	3.13	150	15.3	3310	338	*	01 - 6090DA - 559	B-108	B-124	B-143
	200	20.4	3220	328	*		200	20.4	3220	328	*	01 - 6095DA - 559	B-108	B-124	B-143
	250	25.5	5400	550	*		250	25.5	5400	550	*	01 - 6100DA - 559	B-108	B-124	B-143
			4380	446	0.91				5400	550	1.09	01 - 6105DA - 559	B-108	B-124	B-143
	331	33.8	9810	1000	1.58		275	28.0	9810	1000	1.91	01 - 6120DA - 559	B-108	B-124	B-143
			9810	1000	1.90				9810	1000	2.29	01 - 6125DA - 559	B-108	B-124	B-143
	45.0	4.59	1770	180	*		45.0	4.59	1770	180	*	01 - 6070DA - 649	B-108	B-124	B-143
	57.4	5.85	1580	161	*		57.4	5.85	1580	161	*	01 - 6075DA - 649	B-108	B-124	B-143
	146	14.9	3300	336	*		146	14.9	3300	336	*	01 - 6090DA - 649	B-108	B-124	B-143
2.23	250	25.5	5400	550	*	2.70	250	25.5	5400	550	*	01 - 6100DA - 649	B-108	B-124	B-143
	296	30.2	5090	519	*		296	30.2	5090	519	*	01 - 6105DA - 649	B-108	B-124	B-143
	385	39.2	9810	1000	1.36		319	32.5	9810	1000	1.65	01 - 6120DA - 649	B-108	B-124	B-143
			9810	1000	1.64				9810	1000	1.98	01 - 6125DA - 649	B-108	B-124	B-143
	24.0	2.45	1180	120	*		24.0	2.45	1180	120	*	01 - 6060DA - 731	B-108	B-124	B-143
	30.0	3.06	1180	120	*		30.0	3.06	1180	120	*	01 - 6065DA - 731	B-108	B-124	B-143
	45.0	4.59	1770	180	*		45.0	4.59	1770	180	*	01 - 6070DA - 731	B-108	B-124	B-143
	60.0	6.12	1660	169	*		60.0	6.12	1660	169	*	01 - 6075DA - 731	B-108	B-124	B-143
1.98	150	15.3	3310	338	*	2.39	150	15.3	3310	338	*	01 - 6090DA - 731	B-108	B-124	B-143
	200	20.4	3220	328	*		200	20.4	3220	328	*	01 - 6095DA - 731	B-108	B-124	B-143
	250	25.5	5400	550	*		250	25.5	5400	550	*	01 - 6100DA - 731	B-108	B-124	B-143
	300	30.6	5400	550	*		300	30.6	5400	550	*	01 - 6105DA - 731	B-108	B-124	B-143
	433	44.2	9810	1000	1.21		359	36.6	9810	1000	1.46	01 - 6120DA - 731	B-108	B-124	B-143
			9810	1000	1.45				9810	1000	1.75	01 - 6125DA - 731	B-108	B-124	B-143

1. Combinations in **bold** are the recommended models for operations for 10 hours/day with uniform load (service factor is about 1.0 for motor rating at 50Hz).
2. Motor slippage may affect n_1 and n_2. Refer to technical data for details.
3. CNHM, CHHM, CNFM, CHFM, CNVM, and CVVM indicate types. Refer to page B-10 for details.
4. Lubrication method is different for each model. Refer to "Lubrication" section in page F-4~F-5 for details.
5. "6" at the end of "input capacity symbol" indicates models with 6P motor. Other models come with 4P motor.

Selection Tables Gearmotors

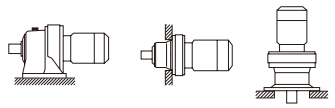

0.1 kW

n_1: Motor Speed

Hz	50Hz		60Hz	
P	4	6	4	6
n_1 r/min	1450	980	1750	1165

50Hz						60Hz						Nomenclature				Page of Dimension Sheet		
Output Speed n_2 [r/min]	Output Torque Tout [N·m]	[kgf·m]	Allowable Radial Load Pro [N]	[kgf]	SF	Output Speed n_2 [r/min]	Output Torque Tout [N·m]	[kgf·m]	Allowable Radial Load Pro [N]	[kgf]	SF	Input Capacity Symbol	Frame Size	Reduction Ratio		CNHM CHHM	CNFM CHFM	CNVM CVVM
	24.0	2.45	1180	120	*		24.0	2.45	1180	120	*	01 -	6060DA	- 841		B-108	B-124	B-143
	30.0	3.06	1180	120	*		30.0	3.06	1180	120	*	01 -	6065DA	- 841		B-108	B-124	B-143
	45.0	4.59	1770	180	*		45.0	4.59	1770	180	*	01 -	6070DA	- 841		B-108	B-124	B-143
	60.0	6.12	1770	180	*		60.0	6.12	1770	180	*	01 -	6075DA	- 841		B-108	B-124	B-143
1.72	150	15.3	3290	336	*	2.08	150	15.3	3290	336	*	01 -	6090DA	- 841		B-108	B-124	B-143
	200	20.4	3200	326	*		200	20.4	3200	326	*	01 -	6095DA	- 841		B-108	B-124	B-143
	250	25.5	5400	550	*		250	25.5	5400	550	*	01 -	6100DA	- 841		B-108	B-124	B-143
	300	30.6	5400	550	*		300	30.6	5400	550	*	01 -	6105DA	- 841		B-108	B-124	B-143
	499	50.8	**9810**	**1000**	**1.04**		413	42.1	**9810**	**1000**	**1.26**	**01 -**	**6120DA**	**- 841**		**B-108**	**B-124**	**B-143**
			9810	1000	1.26				9810	1000	1.53	01 -	6125DA	- 841		B-108	B-124	B-143
	45.0	4.59	1770	180	*		45.0	4.59	1770	180	*	01 -	6070DA	- 1003		B-108	B-124	B-143
	57.4	5.85	1580	161	*		57.4	5.85	1580	161	*	01 -	6075DA	- 1003		B-108	B-124	B-143
1.45	146	14.9	3300	336	*	1.74	146	14.9	3300	336	*	01 -	6090DA	- 1003		B-108	B-124	B-143
	250	25.5	5400	550	*		250	25.5	5400	550	*	01 -	6100DA	- 1003		B-108	B-124	B-143
	296	30.2	5090	519	*		296	30.2	5090	519	*	01 -	6105DA	- 1003		B-108	B-124	B-143
	595	**60.6**	**9810**	**1000**	**1.06**		**493**	**50.2**	**9810**	**1000**	**1.28**	**01 -**	**6125DA**	**- 1003**		**B-108**	**B-124**	**B-143**
	24.0	2.45	1180	120	*		24.0	2.45	1180	120	*	01 -	6060DA	- 1247		B-108	B-124	B-143
	30.0	3.06	1180	120	*		30.0	3.06	1180	120	*	01 -	6065DA	- 1247		B-108	B-124	B-143
	45.0	4.59	1770	180	*		45.0	4.59	1770	180	*	01 -	6070DA	- 1247		B-108	B-124	B-143
	60.0	6.12	1660	169	*		60.0	6.12	1660	169	*	01 -	6075DA	- 1247		B-108	B-124	B-143
1.16	150	15.3	3310	338	*	1.40	150	15.3	3310	338	*	01 -	6090DA	- 1247		B-108	B-124	B-143
	200	20.4	3220	328	*		200	20.4	3220	328	*	01 -	6095DA	- 1247		B-108	B-124	B-143
	250	25.5	5400	550	*		250	25.5	5400	550	*	01 -	6100DA	- 1247		B-108	B-124	B-143
	300	30.6	5400	550	*		300	30.6	5400	550	*	01 -	6105DA	- 1247		B-108	B-124	B-143
	525	53.5	9810	1000	*		525	53.5	9810	1000	*	01 -	6120DA	- 1247		B-108	B-124	B-143
	739	75.3	9810	1000	0.85		612	62.4	9810	1000	1.03	01 -	6125DA	- 1247		B-108	B-124	B-143
	150	15.3	3310	338	*		150	15.3	3310	338	*	01 -	6090DA	- 1479		B-108	B-124	B-143
	193	19.6	3240	330	*		193	19.6	3240	330	*	01 -	6095DA	- 1479		B-108	B-124	B-143
0.980	250	25.5	5400	550	*	1.18	250	25.5	5400	550	*	01 -	6100DA	- 1479		B-108	B-124	B-143
	300	30.6	4780	488	*		300	30.6	4780	488	*	01 -	6105DA	- 1479		B-108	B-124	B-143
	525	53.5	9780	997	*		525	53.5	9780	997	*	01 -	6120DA	- 1479		B-108	B-124	B-143
	630	64.2	9560	974	*		630	64.2	9560	974	*	01 -	6125DA	- 1479		B-108	B-124	B-143
	24.0	2.45	1180	120	*		24.0	2.45	1180	120	*	01 -	6060DA	- 1849		B-108	B-124	B-143
	30.0	3.06	1180	120	*		30.0	3.06	1180	120	*	01 -	6065DA	- 1849		B-108	B-124	B-143
	45.0	4.59	1770	180	*		45.0	4.59	1770	180	*	01 -	6070DA	- 1849		B-108	B-124	B-143
	60.0	6.12	1660	169	*		60.0	6.12	1660	169	*	01 -	6075DA	- 1849		B-108	B-124	B-143
0.784	150	15.3	3310	338	*	0.946	150	15.3	3310	338	*	01 -	6090DA	- 1849		B-108	B-124	B-143
	200	20.4	3220	328	*		200	20.4	3220	328	*	01 -	6095DA	- 1849		B-108	B-124	B-143
	250	25.5	5400	550	*		250	25.5	5400	550	*	01 -	6100DA	- 1849		B-108	B-124	B-143
	300	30.6	5400	550	*		300	30.6	5400	550	*	01 -	6105DA	- 1849		B-108	B-124	B-143
	525	53.5	9810	1000	*		525	53.5	9810	1000	*	01 -	6120DA	- 1849		B-108	B-124	B-143
	630	64.2	9810	1000	*		630	64.2	9810	1000	*	01 -	6125DA	- 1849		B-108	B-124	B-143
	45.0	4.59	1770	180	*		45.0	4.59	1770	180	*	01 -	6070DA	- 2065		B-108	B-124	B-143
	57.4	5.85	1580	161	*		57.4	5.85	1580	161	*	01 -	6075DA	- 2065		B-108	B-124	B-143
	146	14.9	3300	336	*		146	14.9	3300	336	*	01 -	6090DA	- 2065		B-108	B-124	B-143
0.702	250	25.5	5400	550	*	0.847	250	25.5	5400	550	*	01 -	6100DA	- 2065		B-108	B-124	B-143
	296	30.2	5090	519	*		296	30.2	5090	519	*	01 -	6105DA	- 2065		B-108	B-124	B-143
	525	53.5	9810	1000	*		525	53.5	9810	1000	*	01 -	6120DA	- 2065		B-108	B-124	B-143
	630	64.2	9810	1000	*		630	64.2	9810	1000	*	01 -	6125DA	- 2065		B-108	B-124	B-143
	45.0	4.59	1770	180	*		45.0	4.59	1770	180	*	01 -	6070DA	- 2537		B-108	B-124	B-143
	57.4	5.85	1580	161	*		57.4	5.85	1580	161	*	01 -	6075DA	- 2537		B-108	B-124	B-143
	146	14.9	3300	336	*		146	14.9	3300	336	*	01 -	6090DA	- 2537		B-108	B-124	B-143
0.572	250	25.5	5400	550	*	0.690	250	25.5	5400	550	*	01 -	6100DA	- 2537		B-108	B-124	B-143
	296	30.2	5090	519	*		296	30.2	5090	519	*	01 -	6105DA	- 2537		B-108	B-124	B-143
	525	53.5	9810	1000	*		525	53.5	9810	1000	*	01 -	6120DA	- 2537		B-108	B-124	B-143
	630	64.2	9810	1000	*		630	64.2	9810	1000	*	01 -	6125DA	- 2537		B-108	B-124	B-143

6. "☆" indicates models manufactured with reducer and motor separately mounted on a common baseplate (horizontal shaft direction) or on an adaptor (vertical shaft direction). Consult us for details, including dimensions.
7. Allowable radial load (Pro) is the value at the midpoint of the slow speed shaft.
8. "(K)" indicates models with reduction ratios equal to nominal ratio. Refer to Table A-3 "6000SK Series (Actual Reduction Ratio)" on page A-4 for actual reduction ratio. Indicated reduction ratio is the same as actual reduction ratio for other models.
9. Maintain torque load during operation within "Output torque" in the table for models with "*" in the SF column. They cannot be operated with 100% motor rating.

Selection Tables Gearmotors

n_1: Motor Speed

0.1 kW	Hz	50Hz		60Hz	
	P	4	6	4	6
	n_1 r/min	1450	980	1750	1165

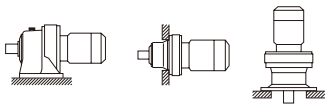

50Hz						60Hz						Nomenclature	Page of Dimension Sheet		
Output Speed n_2 [r/min]	Output Torque Tout [N·m]	[kgf·m]	Allowable Radial Load Pro [N]	[kgf]	SF	Output Speed n_2 [r/min]	Output Torque Tout [N·m]	[kgf·m]	Allowable Radial Load Pro [N]	[kgf]	SF	Input Capacity Symbol – Frame Size – Reduction Ratio	CNHM CHHM	CNFM CHFM	CNVM CVVM
0.476	150	15.3	3310	338	*	0.575	150	15.3	3310	338	*	01 - 6090DA - 3045	B-108	B-124	B-143
	192	19.6	3240	330	*		192	19.6	3240	330	*	01 - 6095DA - 3045	B-108	B-124	B-143
	250	25.5	5400	550	*		250	25.5	5400	550	*	01 - 6100DA - 3045	B-108	B-124	B-143
	300	30.6	4780	488	*		300	30.6	4780	488	*	01 - 6105DA - 3045	B-108	B-124	B-143
	525	53.5	9780	997	*		525	53.5	9780	997	*	01 - 6120DA - 3045	B-108	B-124	B-143
	630	64.2	9560	974	*		630	64.2	9560	974	*	01 - 6125DA - 3045	B-108	B-124	B-143
0.417	146	14.9	3300	336	*	0.503	146	14.9	3300	336	*	01 - 6090DA - 3481	B-108	B-124	B-143
	250	25.5	5400	550	*		250	25.5	5400	550	*	01 - 6100DA - 3481	B-108	B-124	B-143
	296	30.2	5090	519	*		296	30.2	5090	519	*	01 - 6105DA - 3481	B-108	B-124	B-143
	525	53.5	9810	1000	*		525	53.5	9810	1000	*	01 - 6120DA - 3481	B-108	B-124	B-143
	630	64.2	9810	1000	*		630	64.2	9810	1000	*	01 - 6125DA - 3481	B-108	B-124	B-143
0.327	150	15.3	3310	338	*	0.394	150	15.3	3310	338	*	01 - 6090DA - 4437	B-108	B-124	B-143
	192	19.6	3240	330	*		192	19.6	3240	330	*	01 - 6095DA - 4437	B-108	B-124	B-143
	250	25.5	5400	550	*		250	25.5	5400	550	*	01 - 6100DA - 4437	B-108	B-124	B-143
	300	30.6	4780	488	*		300	30.6	4780	488	*	01 - 6105DA - 4437	B-108	B-124	B-143
	525	53.5	9780	997	*		525	53.5	9780	997	*	01 - 6120DA - 4437	B-108	B-124	B-143
	630	64.2	9560	974	*		630	64.2	9560	974	*	01 - 6125DA - 4437	B-108	B-124	B-143
0.282	150	15.3	3310	338	*	0.341	150	15.3	3310	338	*	01 - 6090DA - 5133	B-108	B-124	B-143
	192	19.6	3240	330	*		192	19.6	3240	330	*	01 - 6095DA - 5133	B-108	B-124	B-143
	250	25.5	5400	550	*		250	25.5	5400	550	*	01 - 6100DA - 5133	B-108	B-124	B-143
	300	30.6	4780	488	*		300	30.6	4780	488	*	01 - 6105DA - 5133	B-108	B-124	B-143
	525	53.5	9780	997	*		525	53.5	9780	997	*	01 - 6120DA - 5133	B-108	B-124	B-143
	630	64.2	9560	974	*		630	64.2	9560	974	*	01 - 6125DA - 5133	B-108	B-124	B-143
0.235	525	53.5	9780	997	*	0.283	525	53.5	9780	997	*	01 - 6120DB - 6177	B-108	B-124	B-143
	630	64.2	9560	974	*		630	64.2	9560	974	*	01 - 6125DB - 6177	B-108	B-124	B-143
0.192	525	53.5	9780	997	*	0.231	525	53.5	9780	997	*	01 - 6120DB - 7569	B-108	B-124	B-143
	630	64.2	9560	974	*		630	64.2	9560	974	*	01 - 6125DB - 7569	B-108	B-124	B-143

n_1: Motor Speed

0.2 kW	Hz	50Hz		60Hz	
	P	4	6	4	6
	n_1 r/min	1450	980	1750	1165

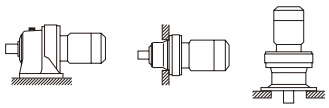

50Hz						60Hz						Nomenclature	Page of Dimension Sheet		
Output Speed n_2 [r/min]	Output Torque Tout [N·m]	[kgf·m]	Allowable Radial Load Pro [N]	[kgf]	SF	Output Speed n_2 [r/min]	Output Torque Tout [N·m]	[kgf·m]	Allowable Radial Load Pro [N]	[kgf]	SF	Input Capacity Symbol – Frame Size – Reduction Ratio	CNHM CHHM	CNFM CHFM	CNVM CVVM
242	7.51	0.765	**798**	**81.4**	**1.00**	292	6.22	0.634	**751**	**76.6**	**1.00**	**02 - 6060 - 6**	**B-100**	**B-116**	**B-135**
			798	81.4	1.43				751	76.6	1.43	02 - 6065 - 6	B-100	B-116	B-135
			1390	142	1.74				1310	134	1.74	02 - 6070 - 6	B-100	B-116	B-135
			1390	142	2.04				1310	134	2.04	02 - 6075 - 6	B-100	B-116	B-135
			1930	197	2.96				1820	185	2.96	02 - 6080 - 6	B-100	B-116	B-135
181	10.0	1.02	**912**	**93.0**	**1.00**	219	8.29	0.846	**859**	**87.5**	**1.00**	**02 - 6060 - 8**	**B-100**	**B-116**	**B-135**
			912	93	1.43				859	88	1.43	02 - 6065 - 8	B-100	B-116	B-135
			1540	157	1.74				1450	148	1.74	02 - 6070 - 8	B-100	B-116	B-135
			1540	157	2.04				1450	148	2.04	02 - 6075 - 8	B-100	B-116	B-135
			2100	214	2.96				1970	201	2.96	02 - 6080 - 8	B-100	B-116	B-135

1. Combinations in **bold** are the recommended models for operations for 10 hours/day with uniform load (service factor is about 1.0 for motor rating at 50Hz).
2. Motor slippage may affect n_1 and n_2. Refer to technical data for details.
3. CNHM, CHHM, CNFM, CHFM, CNVM, and CVVM indicate types. Refer to page B-10 for details.
4. Lubrication method is different for each model. Refer to "Lubrication" section in page F-4~F-5 for details.
5. "6" at the end of "input capacity symbol" indicates models with 6P motor. Other models come with 4P motor.

Selection Tables Gearmotors

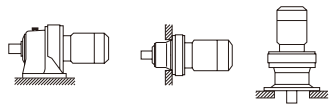

CHHM/CNHM CHFM/CNFM CVVM/CNVM

n_1: Motor Speed

0.2 kW	Hz	50Hz		60Hz	
	P	4	6	4	6
	n_1 r/min	1450	980	1750	1165

50Hz						60Hz						Nomenclature				Page of Dimension Sheet		
Output Speed n_2 [r/min]	Output Torque Tout [N·m]	[kgf·m]	Allowable Radial Load Pro [N]	[kgf]	SF	Output Speed n_2 [r/min]	Output Torque Tout [N·m]	[kgf·m]	Allowable Radial Load Pro [N]	[kgf]	SF	Input Capacity Symbol	–	Frame Size	– Reduction Ratio	CNHM CHHM	CNFM CHFM	CNVM CVVM
			1180	**120**	**1.00**				**1170**	**119**	**1.00**	**02**	**-**	**6060**	**- 11**	**B-100**	**B-116**	**B-135**
			1180	120	1.43				1170	119	1.43	02	-	6065	- 11	B-100	B-116	B-135
132	13.8	1.40	1730	176	1.74	159	11.4	1.16	1630	166	1.74	02	-	6070	- 11	B-100	B-116	B-135
			1730	176	2.04				1630	166	2.04	02	-	6075	- 11	B-100	B-116	B-135
			2320	236	2.96				2180	222	2.96	02	-	6080	- 11	B-100	B-116	B-135
			1180	**120**	**1.00**				**1180**	**120**	**1.00**	**02**	**-**	**6060**	**- 13**	**B-100**	**B-116**	**B-135**
			1180	120	1.43				1180	120	1.43	02	-	6065	- 13	B-100	B-116	B-135
112	16.3	1.66	1770	180	1.74	135	13.5	1.37	1720	175	1.74	02	-	6070	- 13	B-100	B-116	B-135
			1770	180	2.04				1720	175	2.04	02	-	6075	- 13	B-100	B-116	B-135
			2500	254	2.96				2350	239	2.96	02	-	6080	- 13	B-100	B-116	B-135
			1180	**120**	**1.00**				**1180**	**120**	**1.00**	**02**	**-**	**6060**	**- 15**	**B-100**	**B-116**	**B-135**
			1180	120	1.43				1180	120	1.43	02	-	6065	- 15	B-100	B-116	B-135
96.7	18.8	1.91	1770	180	1.74	117	15.6	1.59	1730	176	1.74	02	-	6070	- 15	B-100	B-116	B-135
			1770	180	2.04				1730	176	2.04	02	-	6075	- 15	B-100	B-116	B-135
			2560	261	2.96				2420	247	2.96	02	-	6080	- 15	B-100	B-116	B-135
			1180	**120**	**1.00**				**1180**	**120**	**1.00**	**02**	**-**	**6060**	**- 17**	**B-100**	**B-116**	**B-135**
			1180	120	1.41				1180	120	1.43	02	-	6065	- 17	B-100	B-116	B-135
85.3	21.3	2.17	1770	180	1.74	103	17.6	1.80	1770	180	1.74	02	-	6070	- 17	B-100	B-116	B-135
			1770	180	2.04				1770	180	2.04	02	-	6075	- 17	B-100	B-116	B-135
			2560	261	2.96				2540	259	2.96	02	-	6080	- 17	B-100	B-116	B-135
			1180	**120**	**1.14**				**1180**	**120**	**1.17**	**02**	**-**	**6065**	**- 21**	**B-100**	**B-116**	**B-135**
			1770	180	1.60				1770	180	1.60	02	-	6070	- 21	B-100	B-116	B-135
69.0	26.3	2.68	1770	180	2.04	83.3	21.8	2.22	1770	180	2.04	02	-	6075	- 21	B-100	B-116	B-135
			2560	261	2.39				2480	253	2.39	02	-	6080	- 21	B-100	B-116	B-135
			2560	261	2.75				2480	253	2.75	02	-	6085	- 21	B-100	B-116	B-135
			1180	120	0.83				1180	120	0.83	02	-	6065	- 25	B-100	B-116	B-135
			1770	**180**	**1.15**				**1770**	**180**	**1.15**	**02**	**-**	**6070**	**- 25**	**B-100**	**B-116**	**B-135**
58.0	31.3	3.19	1770	180	1.47	70.0	25.9	2.64	1770	180	1.47	02	-	6075	- 25	B-100	B-116	B-135
			2560	261	1.70				2550	260	1.70	02	-	6080	- 25	B-100	B-116	B-135
			2560	261	2.38				2550	260	2.38	02	-	6085	- 25	B-100	B-116	B-135
			1180	120	0.83				1180	120	0.83	02	-	6065	- 29	B-100	B-116	B-135
			1770	**180**	**1.13**				**1770**	**180**	**1.13**	**02**	**-**	**6070**	**- 29**	**B-100**	**B-116**	**B-135**
50.0	36.3	3.70	1770	180	1.43	60.3	30.1	3.07	1770	180	1.43	02	-	6075	- 29	B-100	B-116	B-135
			2560	261	1.70				2560	261	1.70	02	-	6080	- 29	B-100	B-116	B-135
			2560	261	2.34				2560	261	2.34	02	-	6085	- 29	B-100	B-116	B-135
			1770	**180**	**1.03**				**1770**	**180**	**1.06**	**02**	**-**	**6070**	**- 35**	**B-100**	**B-116**	**B-135**
			1770	180	1.36				1770	180	1.40	02	-	6075	- 35	B-100	B-116	B-135
41.4	43.8	4.46	2560	261	1.45	50.0	36.3	3.70	2560	261	1.65	02	-	6080	- 35	B-100	B-116	B-135
			2560	261	1.64				2560	261	1.86	02	-	6085	- 35	B-100	B-116	B-135
			3340	340	3.06				3340	340	3.06	02	-	6090	- 35	B-100	B-116	B-135
			1770	**180**	**1.12**				**1770**	**180**	**1.13**	**02**	**-**	**6075**	**- 43**	**B-100**	**B-116**	**B-135**
33.7	53.8	5.49	2560	261	1.25	40.7	44.6	4.54	2560	261	1.25	02	-	6080	- 43	B-100	B-116	B-135
			2560	261	1.47				2560	261	1.47	02	-	6085	- 43	B-100	B-116	B-135
			3340	340	2.18				3340	340	2.18	02	-	6090	- 43	B-100	B-116	B-135
			2560	**261**	**1.21**				**2560**	**261**	**1.21**	**02**	**-**	**6085**	**- 51**	**B-100**	**B-116**	**B-135**
28.4	63.8	6.51	3340	340	1.66	34.3	52.9	5.39	3340	340	1.66	02	-	6090	- 51	B-100	B-116	B-135
			3340	340	2.04				3340	340	2.11	02	-	6095	- 51	B-100	B-116	B-135
			5400	550	2.80				5400	550	2.80	02	-	6100	- 51	B-101	B-117	B-136
			2560	**261**	**1.17**				**2560**	**261**	**1.17**	**02**	**-**	**6085**	**- 59**	**B-100**	**B-116**	**B-135**
24.6	73.8	7.53	3340	340	1.55	29.7	61.2	6.24	3340	340	1.55	02	-	6090	- 59	B-100	B-116	B-135
			3340	340	1.68				3340	340	1.87	02	-	6095	- 59	B-100	B-116	B-135
			5400	550	2.58				5400	550	2.58	02	-	6100	- 59	B-101	B-117	B-136
			2380	243	0.83				2510	256	0.94	02	-	6085	- 71	B-100	B-116	B-135
			3340	**340**	**1.26**				**3340**	**340**	**1.26**	**02**	**-**	**6090**	**- 71**	**B-100**	**B-116**	**B-135**
20.4	88.8	9.06	3340	340	1.39	24.6	73.6	7.50	3340	340	1.51	02	-	6095	- 71	B-100	B-116	B-135
			5400	550	2.18				5400	550	2.18	02	-	6100	- 71	B-101	B-117	B-136
			5400	550	2.53				5400	550	2.81	02	-	6105	- 71	B-101	B-117	B-136

6. "☆" indicates models manufactured with reducer and motor separately mounted on a common baseplate (horizontal shaft direction) or on an adaptor (vertical shaft direction). Consult us for details, including dimensions.
7. Allowable radial load (Pro) is the value at the midpoint of the slow speed shaft.
8. "(K)" indicates models with reduction ratios equal to nominal ratio. Refer to Table A-3 "6000SK Series (Actual Reduction Ratio)" on page A-4 for actual reduction ratio. Indicated reduction ratio is the same as actual reduction ratio for other models.
9. Maintain torque load during operation within "Output torque" in the table for models with "*" in the SF column. They cannot be operated with 100% motor rating.

Selection Tables Gearmotors

n_1: Motor Speed

0.2 kW	Hz	50Hz		60Hz	
	P	4	6	4	6
	n_1 r/min	1450	980	1750	1165

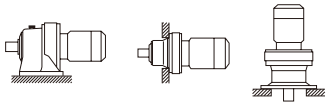

50Hz						60Hz						Nomenclature				Page of Dimension Sheet		
Output Speed n_2 [r/min]	Output Torque Tout [N·m]	Output Torque Tout [kgf·m]	Allowable Radial Load Pro [N]	Allowable Radial Load Pro [kgf]	SF	Output Speed n_2 [r/min]	Output Torque Tout [N·m]	Output Torque Tout [kgf·m]	Allowable Radial Load Pro [N]	Allowable Radial Load Pro [kgf]	SF	Input Capacity Symbol	– Frame Size	– Reduction Ratio		CNHM CHHM	CNFM CHFM	CNVM CVVM
16.7	109	11.1	**3340**	**340**	**1.06**	20.1	90.2	9.20	**3340**	**340**	**1.06**	**02 -**	**6090**	**- 87**		**B-100**	**B-116**	**B-135**
			3340	340	1.32				3340	340	1.51	02 -	6095	- 87		B-100	B-116	B-135
			5400	550	2.17				5400	550	2.17	02 -	6100	- 87		B-101	B-117	B-136
			5400	550	2.52				5400	550	2.83	02 -	6105	- 87		B-101	B-117	B-136
13.9	60.0	6.12	1770	180	*	16.8	60.0	6.12	1770	180	*	02 -	6075DA	- 104		B-108	B-124	B-143
	123	12.6	3340	340	1.22		102	10.4	3340	340	1.47	02 -	6090DA	- 104		B-108	B-124	B-143
			3340	340	1.47				3340	340	1.77	02 -	6095DA	- 104		B-108	B-124	B-143
			5400	550	2.03				5400	550	2.15	02 -	6100DA	- 104		B-108	B-124	B-143
			5400	550	2.03				5400	550	2.03	02 -	6105DA	- 104		B-108	B-124	B-143
12.2	149.0	15.2	**5400**	**550**	**1.05**	14.7	123	12.6	**5400**	**550**	**1.05**	**02 -**	**6100**	**- 119**		**B-101**	**B-117**	**B-136**
			5400	550	1.43				5400	550	1.43	02 -	6105	- 119		B-101	B-117	B-136
12.0	143	14.6	**3340**	**340**	**1.05**	14.5	119	12.1	**3340**	**340**	**1.26**	**02 -**	**6090DA**	**- 121**		**B-108**	**B-124**	**B-143**
			3340	340	1.12				3340	340	1.35	02 -	6095DA	- 121		B-108	B-124	B-143
			5400	550	1.74				5400	550	2.03	02 -	6100DA	- 121		B-108	B-124	B-143
			5400	550	2.03				5400	550	2.03	02 -	6105DA	- 121		B-108	B-124	B-143
			9810	1000	2.03				9810	1000	2.03	02 -	6120DA	- 121		B-108	B-124	B-143
10.1	170	17.3	**3340**	**340**	**1.08**	12.2	140	14.3	**3340**	**340**	**1.30**	**02 -**	**6095DA**	**- 143**		**B-108**	**B-124**	**B-143**
			5400	550	1.47				5400	550	1.78	02 -	6100DA	- 143		B-108	B-124	B-143
			5400	550	1.77				5400	550	2.14	02 -	6105DA	- 143		B-108	B-124	B-143
			9810	1000	2.15				9810	1000	2.15	02 -	6120DA	- 143		B-108	B-124	B-143
8.79	150	15.3	3340	340	*	10.6	150	15.3	3340	340	*	02 -	6090DA	- 165		B-108	B-124	B-143
	196	19.9	**3340**	**340**	**1.02**		162	16.5	**3340**	**340**	**1.23**	**02 -**	**6095DA**	**- 165**		**B-108**	**B-124**	**B-143**
			5400	550	1.28				5400	550	1.54	02 -	6100DA	- 165		B-108	B-124	B-143
			5400	550	1.53				5400	550	1.85	02 -	6105DA	- 165		B-108	B-124	B-143
			9810	1000	2.15				9810	1000	2.15	02 -	6120DA	- 165		B-108	B-124	B-143
			9810	1000	2.68				9810	1000	3.24	02 -	6120DB	- 165		B-108	B-124	B-143
7.44	150	15.3	3340	340	*	8.97	150	15.3	3340	340	*	02 -	6090DA	- 195		B-108	B-124	B-143
	231	23.6	3340	340	0.87		192	19.5	3340	340	1.04	02 -	6095DA	- 195		B-108	B-124	B-143
			5400	550	1.08				5400	550	1.31	02 -	6100DA	- 195		B-108	B-124	B-143
			5400	550	1.30				5400	550	1.57	02 -	6105DA	- 195		B-108	B-124	B-143
			9810	1000	2.15				9810	1000	2.15	02 -	6120DA	- 195		B-108	B-124	B-143
			9810	1000	2.27				9810	1000	2.74	02 -	6120DB	- 195		B-108	B-124	B-143
			9810	1000	2.73				9810	1000	3.29	02 -	6125DB	- 195		B-108	B-124	B-143
6.28	150	15.3	3340	340	*	7.58	150	15.3	3340	340	*	02 -	6090DA	- 231		B-108	B-124	B-143
	200	20.4	3340	340	*		200	20.4	3340	340	*	02 -	6095DA	- 231		B-108	B-124	B-143
	274	27.9	5400	550	1.10		227	23.1	5400	550	1.32	02 -	6105DA	- 231		B-108	B-124	B-143
			9810	1000	1.91				9810	1000	2.15	02 -	6120DA	- 231		B-108	B-124	B-143
			9810	1000	1.91				9810	1000	2.30	02 -	6120DB	- 231		B-108	B-124	B-143
			9810	1000	2.15				9810	1000	2.15	02 -	6125DA	- 231		B-108	B-124	B-143
			9810	1000	2.30				9810	1000	2.78	02 -	6125DB	- 231		B-108	B-124	B-143
			14700	1500	2.85				14700	1500	3.44	02 -	6130DB	- 231		B-109	B-125	B-143
5.31	150	15.3	3340	340	*	6.41	150	15.3	3340	340	*	02 -	6090DA	- 273		B-108	B-124	B-143
	200	20.4	3340	340	*		200	20.4	3340	340	*	02 -	6095DA	- 273		B-108	B-124	B-143
	250	25.5	5400	550	*		250	25.5	5400	550	*	02 -	6100DA	- 273		B-108	B-124	B-143
	324	33.0	5400	550	0.93		268	27.3	5400	550	1.12	02 -	6105DA	- 273		B-108	B-124	B-143
			9810	1000	1.61				9810	1000	1.95	02 -	6120DA	- 273		B-108	B-124	B-143
			9810	1000	1.95				9810	1000	2.15	02 -	6125DA	- 273		B-108	B-124	B-143
			9810	1000	1.95				9810	1000	2.35	02 -	6125DB	- 273		B-108	B-124	B-143
			14700	1500	2.15				14700	1500	2.15	02 -	6130DA	- 273		B-109	B-125	B-144
			14700	1500	2.41				14700	1500	2.91	02 -	6130DB	- 273		B-109	B-125	B-143
			14700	1500	2.90				14700	1500	3.51	02 -	6135DB	- 273		B-109	B-125	B-144

1. Combinations in **bold** are the recommended models for operations for 10 hours/day with uniform load (service factor is about 1.0 for motor rating at 50Hz).
2. Motor slippage may affect n_1 and n_2. Refer to technical data for details.
3. CNHM, CHHM, CNFM, CHFM, CNVM, and CVVM indicate types. Refer to page B-10 for details.
4. Lubrication method is different for each model. Refer to "Lubrication" section in page F-4~F-5 for details.
5. "6" at the end of "input capacity symbol" indicates models with 6P motor. Other models come with 4P motor.

Selection Tables Gearmotors

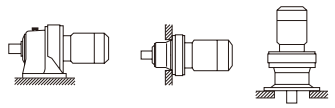

n_1: Motor Speed

0.2 kW	Hz	50Hz		60Hz	
	P	4	6	4	6
	n_1 r/min	1450	980	1750	1165

50Hz						60Hz						Nomenclature				Page of Dimension Sheet		
Output Speed n_2 [r/min]	Output Torque Tout [N·m]	[kgf·m]	Allowable Radial Load Pro [N]	[kgf]	SF	Output Speed n_2 [r/min]	Output Torque Tout [N·m]	[kgf·m]	Allowable Radial Load Pro [N]	[kgf]	SF	Input Capacity Symbol	–	Frame Size	– Reduction Ratio	CNHM CHHM	CNFM CHFM	CNVM CVVM
4.55	200	20.4	3200	326	*	5.49	200	20.4	3200	326	*	02	-	6095DA	- 319	B-108	B-124	B-143
	250	25.5	5400	550	*		250	25.5	5400	550	*	02	-	6100DA	- 319	B-108	B-124	B-143
	300	30.6	5400	550	*		300	30.6	5400	550	*	02	-	6105DA	- 319	B-108	B-124	B-143
	378	38.6	9810	1000	1.38		313	31.9	9810	1000	1.66	02	-	6120DA	- 319	B-108	B-124	B-143
			9810	1000	1.67				9810	1000	2.01	02	-	6125DA	- 319	B-108	B-124	B-143
			14700	1500	2.03				14700	1500	2.03	02	-	6130DA	- 319	B-109	B-125	B-144
			14700	1500	2.06				14700	1500	2.49	02	-	6130DB	- 319	B-109	B-125	B-143
			14700	1500	2.03				14700	1500	2.03	02	-	6135DA	- 319	B-109	B-125	B-144
			14700	1500	2.49				14700	1500	3.00	02	-	6135DB	- 319	B-109	B-125	B-144
3.85	200	20.4	3200	326	*	4.64	200	20.4	3200	326	*	02	-	6095DA	- 377	B-108	B-124	B-143
	250	25.5	5400	550	*		250	25.5	5400	550	*	02	-	6100DA	- 377	B-108	B-124	B-143
	300	30.6	5400	550	*		300	30.6	5400	550	*	02	-	6105DA	- 377	B-108	B-124	B-143
	447	45.6	9810	1000	1.16		370	37.7	9810	1000	1.40	02	-	6120DA	- 377	B-108	B-124	B-143
			9810	1000	1.41				9810	1000	1.70	02	-	6125DA	- 377	B-108	B-124	B-143
			14700	1500	1.75				14700	1500	2.03	02	-	6130DA	- 377	B-109	B-125	B-144
			14700	1500	2.03				14700	1500	2.03	02	-	6135DA	- 377	B-109	B-125	B-144
			14700	1500	2.10				14700	1500	2.54	02	-	6135DB	- 377	B-109	B-125	B-144
			16000	1630	2.03				16000	1630	2.03	02	-	6140DA	- 377	B-109	B-125	B-144
			16000	1630	2.74				16000	1630	3.31	02	-	6140DB	- 377	B-109	B-125	B-144
3.07	250	25.5	5400	550	*	3.70	250	25.5	5400	550	*	02	-	6100DA	- 473	B-108	B-124	B-143
	300	30.6	5400	550	*		300	30.6	5400	550	*	02	-	6105DA	- 473	B-108	B-124	B-143
	561	57.2	9810	1000	1.12		465	47.4	9810	1000	1.36	02	-	6125DA	- 473	B-108	B-124	B-143
			14700	1500	1.39				14700	1500	1.68	02	-	6130DA	- 473	B-109	B-125	B-144
			14700	1500	1.68				14700	1500	2.02	02	-	6135DA	- 473	B-109	B-125	B-144
			16000	1630	2.03				16000	1630	2.03	02	-	6140DA	- 473	B-109	B-125	B-144
			16000	1630	2.18				16000	1630	2.64	02	-	6140DB	- 473	B-109	B-125	B-144
			16000	1630	2.44				16000	1630	2.95	02	-	6145DB	- 473	B-109	B-125	B-144
2.59	300	30.6	5400	550	*	3.13	300	30.6	5400	550	*	02	-	6105DA	- 559	B-108	B-124	B-143
	525	53.5	9810	1000	*		525	53.5	9810	1000	*	02	-	6120DA	- 559	B-108	B-124	B-143
	663	67.6	9810	1000	0.95		549	56.0	9810	1000	1.15	02	-	6125DA	- 559	B-108	B-124	B-143
			14700	1500	1.18				14700	1500	1.42	02	-	6130DA	- 559	B-109	B-125	B-144
			14700	1500	1.42				14700	1500	1.71	02	-	6135DA	- 559	B-109	B-125	B-144
			16000	1630	1.85				16000	1630	2.03	02	-	6140DA	- 559	B-109	B-125	B-144
			16000	1630	1.85				16000	1630	2.23	02	-	6140DB	- 559	B-109	B-125	B-144
			16000	1630	2.03				16000	1630	2.03	02	-	6145DA	- 559	B-109	B-125	B-144
			16000	1630	2.07				16000	1630	2.50	02	-	6145DB	- 559	B-109	B-125	B-144
2.23	525	53.5	9810	1000	*	2.70	525	53.5	9810	1000	*	02	-	6120DA	- 649	B-108	B-124	B-143
	630	64.2	9810	1000	*		630	64.2	9810	1000	*	02	-	6125DA	- 649	B-108	B-124	B-143
	769	78.4	9810	1000	0.82		638	65.0	9810	1000	0.98	02	-	6125DA	- 649	B-108	B-124	B-143
			14700	1500	1.19				14700	1500	1.43	02	-	6130DA	- 649	B-109	B-125	B-144
			14700	1500	1.36				14700	1500	1.65	02	-	6135DA	- 649	B-109	B-125	B-144
			16000	1630	1.59				16000	1630	1.92	02	-	6140DA	- 649	B-109	B-125	B-144
			16000	1630	1.78				16000	1630	2.03	02	-	6145DA	- 649	B-109	B-125	B-144
1.98	525	53.5	9810	1000	*	2.39	525	53.5	9810	1000	*	02	-	6120DA	- 731	B-108	B-124	B-143
	630	64.2	9810	1000	*		630	64.2	9810	1000	*	02	-	6125DA	- 731	B-108	B-124	B-143
	867	88.3	14700	1500	1.08		718	73.2	14700	1500	1.31	02	-	6135DA	- 731	B-109	B-125	B-144
			16000	1630	1.41				16000	1630	1.71	02	-	6140DA	- 731	B-109	B-125	B-144
			16000	1630	1.58				16000	1630	1.91	02	-	6145DA	- 731	B-109	B-125	B-144
1.72	520	53.0	9810	1000	*	2.08	520	53.0	9810	1000	*	02	-	6120DA	- 841	B-108	B-124	B-143
	630	64.2	9810	1000	*		630	64.2	9810	1000	*	02	-	6125DA	- 841	B-108	B-124	B-143
	780	79.5	14700	1500	*		780	79.5	14700	1500	*	02	-	6130DA	- 841	B-109	B-125	B-144
	997	102	14700	1500	0.94		826	84.2	14700	1500	1.14	02	-	6135DA	- 841	B-109	B-125	B-144
			16000	1630	1.23				16000	1630	1.43	02	-	6140DA	- 841	B-109	B-125	B-144
			16000	1630	1.37				16000	1630	1.43	02	-	6145DA	- 841	B-109	B-125	B-144

6. "☆" indicates models manufactured with reducer and motor separately mounted on a common baseplate (horizontal shaft direction) or on an adaptor (vertical shaft direction). Consult us for details, including dimensions.
7. Allowable radial load (Pro) is the value at the midpoint of the slow speed shaft.
8. "(K)" indicates models with reduction ratios equal to nominal ratio. Refer to Table A-3 "6000SK Series (Actual Reduction Ratio)" on page A-4 for actual reduction ratio. Indicated reduction ratio is the same as actual reduction ratio for other models.
9. Maintain torque load during operation within "Output torque" in the table for models with "*" in the SF column. They cannot be operated with 100% motor rating.

Selection Tables Gearmotors

n_1: Motor Speed

0.2 kW	Hz	50Hz		60Hz	
	P	4	6	4	6
	n_1 r/min	1450	980	1750	1165

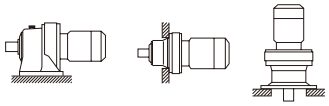

CHHM/CNHM CHFM/CNFM CVVM/CNVM

50Hz						60Hz						Nomenclature	Page of Dimension Sheet		
Output Speed n_2 [r/min]	Output Torque Tout [N·m]	[kgf·m]	Allowable Radial Load Pro [N]	[kgf]	SF	Output Speed n_2 [r/min]	Output Torque Tout [N·m]	[kgf·m]	Allowable Radial Load Pro [N]	[kgf]	SF	Input Capacity Symbol – Frame Size – Reduction Ratio	CNHM CHHM	CNFM CHFM	CNVM CVVM
1.45	525	53.5	9810	1000	*	1.74	525	53.5	9810	1000	*	02 - 6120DA - 1003	B-108	B-124	B-143
	630	64.2	9810	1000	*		630	64.2	9810	1000	*	02 - 6125DA - 1003	B-108	B-124	B-143
	912	93.0	14700	1500	*		912	93.0	14700	1500	*	02 - 6130DA - 1003	B-109	B-125	B-144
			14700	1500	0.88				14700	1500	1.07	02 - 6135DA - 1003	B-109	B-125	B-144
	1190	121	**16000**	**1630**	**1.03**		985	100	**16000**	**1630**	**1.24**	**02 - 6140DA - 1003**	**B-109**	**B-125**	**B-144**
			16000	1630	1.15				16000	1630	1.39	02 - 6145DA - 1003	B-109	B-125	B-144
1.16	630	64.2	9810	1000	*	1.40	630	64.2	9810	1000	*	02 - 6125DA - 1247	B-108	B-124	B-143
	780	79.5	14700	1500	*		780	79.5	14700	1500	*	02 - 6130DA - 1247	B-109	B-125	B-144
	940	95.8	14700	1500	*		940	95.8	14700	1500	*	02 - 6135DA - 1247	B-109	B-125	B-144
	1230	125	16000	1630	*		1230	125	16000	1630	*	02 - 6140DA - 1247	B-109	B-125	B-144
	1480	151	15200	1540	0.93		1220	125	16000	1630	1.12	02 - 6145DA - 1247	B-109	B-125	B-144
0.980	848	86.5	14700	1500	*	1.18	848	86.5	14700	1500	*	02 - 6130DA - 1479	B-109	B-125	B-144
	979	99.8	14700	1500	*		979	99.8	14700	1500	*	02 - 6135DA - 1479	B-109	B-125	B-144
	1230	125	16000	1630	*		1230	125	16000	1630	*	02 - 6140DA - 1479	B-109	B-125	B-144
	1250	127	16000	1630	*		1250	127	16000	1630	*	02 - 6145DA - 1479	B-109	B-125	B-144
0.784	780	79.5	14700	1500	*	0.946	780	79.5	14700	1500	*	02 - 6130DA - 1849	B-109	B-125	B-144
	940	95.8	14700	1500	*		940	95.8	14700	1500	*	02 - 6135DA - 1849	B-109	B-125	B-144
	1230	125	16000	1630	*		1230	125	16000	1630	*	02 - 6140DA - 1849	B-109	B-125	B-144
	1370	140	15700	1600	*		1370	140	15700	1600	*	02 - 6145DA - 1849	B-109	B-125	B-144
	1740	177	22100	2250	*		1740	177	22100	2250	*	02 - 6160DA - 1849	B-110	B-126	B-145
0.702	912	93.0	14700	1500	*	0.847	912	93.0	14700	1500	*	02 - 6130DA - 2065	B-109	B-125	B-144
	1050	107	14700	1500	*		1050	107	14700	1500	*	02 - 6135DA - 2065	B-109	B-125	B-144
	1230	125	16000	1630	*		1230	125	16000	1630	*	02 - 6140DA - 2065	B-109	B-125	B-144
	1370	140	16000	1630	*		1370	140	16000	1630	*	02 - 6145DA - 2065	B-109	B-125	B-144
	1760	179	22100	2250	*		1760	179	22100	2250	*	02 - 6160DA - 2065	B-110	B-126	B-145
	2450	250	22100	2250	0.86		2030	207	22100	2250	1.04	02 - 6165DA - 2065	B-110	B-126	B-145
0.572	912	93.0	14700	1500	*	0.690	912	93.0	14700	1500	*	02 - 6130DA - 2537	B-109	B-125	B-144
	1050	107	14700	1500	*		1050	107	14700	1500	*	02 - 6135DA - 2537	B-109	B-125	B-144
	1230	125	16000	1630	*		1230	125	16000	1630	*	02 - 6140DA - 2537	B-109	B-125	B-144
	1370	140	16000	1630	*		1370	140	16000	1630	*	02 - 6145DA - 2537	B-109	B-125	B-144
	1760	179	22100	2250	*		1760	179	22100	2250	*	02 - 6160DA - 2537	B-110	B-126	B-145
	2100	214	22100	2250	*		2100	214	22100	2250	*	02 - 6165DA - 2537	B-110	B-126	B-145
0.476	848	86.5	14700	1500	*	0.575	848	86.5	14700	1500	*	02 - 6130DA - 3045	B-109	B-125	B-144
	979	99.8	14700	1500	*		979	99.8	14700	1500	*	02 - 6135DA - 3045	B-109	B-125	B-144
	1230	125	16000	1630	*		1230	125	16000	1630	*	02 - 6140DA - 3045	B-109	B-125	B-144
	1250	127	16000	1630	*		1250	127	16000	1630	*	02 - 6145DA - 3045	B-109	B-125	B-144
	1760	179	22100	2250	*		1760	179	22100	2250	*	02 - 6160DA - 3045	B-110	B-126	B-145
	2050	209	21800	2220	*		2050	209	21800	2220	*	02 - 6165DA - 3045	B-110	B-126	B-145
	2530	258	29500	3010	*		2530	258	29500	3010	*	02 - 6170DA - 3045	B-110	B-126	B-145
	3610	368	29500	3010	0.87		2990	305	29500	3010	1.05	02 - 6175DA - 3045	B-110	B-126	B-145
0.417	912	93.0	14700	1500	*	0.503	912	93.0	14700	1500	*	02 - 6130DA - 3481	B-109	B-125	B-144
	1050	107	14700	1500	*		1050	107	14700	1500	*	02 - 6135DA - 3481	B-109	B-125	B-144
	1230	125	16000	1630	*		1230	125	16000	1630	*	02 - 6140DA - 3481	B-109	B-125	B-144
	1370	140	16000	1630	*		1370	140	16000	1630	*	02 - 6145DA - 3481	B-109	B-125	B-144
	1760	179	22100	2250	*		1760	179	22100	2250	*	02 - 6160DA - 3481	B-110	B-126	B-145
	2100	214	22100	2250	*		2100	214	22100	2250	*	02 - 6165DA - 3481	B-110	B-126	B-145
	2530	258	29500	3010	*		2530	258	29500	3010	*	02 - 6170DA - 3481	B-110	B-126	B-145
	3150	321	29500	3010	*		3150	321	29500	3010	*	02 - 6175DA - 3481	B-110	B-126	B-145

1. Combinations in **bold** are the recommended models for operations for 10 hours/day with uniform load (service factor is about 1.0 for motor rating at 50Hz).
2. Motor slippage may affect n_1 and n_2. Refer to technical data for details.
3. CNHM, CHHM, CNFM, CHFM, CNVM, and CVVM indicate types. Refer to page B-10 for details.
4. Lubrication method is different for each model. Refer to "Lubrication" section in page F-4~F-5 for details.
5. "6" at the end of "input capacity symbol" indicates models with 6P motor. Other models come with 4P motor.

Selection Tables Gearmotors

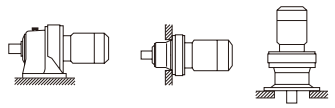

n_1: Motor Speed

0.2 kW	Hz	50Hz		60Hz	
	P	4	6	4	6
	n_1 r/min	1450	980	1750	1165

50Hz						60Hz						Nomenclature				Page of Dimension Sheet		
Output Speed n_2 [r/min]	Output Torque Tout [N·m]	[kgf·m]	Allowable Radial Load Pro [N]	[kgf]	SF	Output Speed n_2 [r/min]	Output Torque Tout [N·m]	[kgf·m]	Allowable Radial Load Pro [N]	[kgf]	SF	Input Capacity Symbol	-	Frame Size	-	Reduction Ratio	CNHM CHHM	CNFM CHFM	CNVM CVVM
0.327	848	86.5	14700	1500	*	0.394	848	86.5	14700	1500	*	02	-	6130DA	-	4437	B-109	B-125	B-144
	979	99.8	14700	1500	*		979	99.8	14700	1500	*	02	-	6135DA	-	4437	B-109	B-125	B-144
	1230	125	16000	1630	*		1230	125	16000	1630	*	02	-	6140DA	-	4437	B-109	B-125	B-144
	1250	127	16000	1630	*		1250	127	16000	1630	*	02	-	6145DA	-	4437	B-109	B-125	B-144
	1760	179	22100	2250	*		1760	179	22100	2250	*	02	-	6160DA	-	4437	B-110	B-126	B-145
	2050	209	21800	2220	*		2050	209	21800	2220	*	02	-	6165DA	-	4437	B-110	B-126	B-145
	2530	258	29500	3010	*		2530	258	29500	3010	*	02	-	6170DA	-	4437	B-110	B-126	B-145
	3150	321	29500	3010	*		3150	321	29500	3010	*	02	-	6175DA	-	4437	B-110	B-126	B-145
0.282	848	86.5	14700	1500	*	0.341	848	86.5	14700	1500	*	02	-	6130DA	-	5133	B-109	B-125	B-144
	979	99.8	14700	1500	*		979	99.8	14700	1500	*	02	-	6135DA	-	5133	B-109	B-125	B-144
	1230	125	16000	1630	*		1230	125	16000	1630	*	02	-	6140DA	-	5133	B-109	B-125	B-144
	1250	127	16000	1630	*		1250	127	16000	1630	*	02	-	6145DA	-	5133	B-109	B-125	B-144
	1760	179	22100	2250	*		1760	179	22100	2250	*	02	-	6160DA	-	5133	B-110	B-126	B-145
	2050	209	21800	2220	*		2050	209	21800	2220	*	02	-	6165DA	-	5133	B-110	B-126	B-145
	2530	258	29500	3010	*		2530	258	29500	3010	*	02	-	6170DA	-	5133	B-110	B-126	B-145
	3150	321	29500	3010	*		3150	321	29500	3010	*	02	-	6175DA	-	5133	B-110	B-126	B-145
0.235	848	86.5	14700	1500	*	0.283	848	86.5	14700	1500	*	02	-	6130DB	-	6177	B-109	B-125	B-143
	979	99.8	14700	1500	*		979	99.8	14700	1500	*	02	-	6135DB	-	6177	B-109	B-125	B-144
	1230	125	16000	1630	*		1230	125	16000	1630	*	02	-	6140DB	-	6177	B-109	B-125	B-144
	1250	127	16000	1630	*		1250	127	16000	1630	*	02	-	6145DB	-	6177	B-109	B-125	B-144
	1760	179	22100	2250	*		1760	179	22100	2250	*	02	-	6160DA	-	6177	B-110	B-126	B-145
	2050	209	21800	2220	*		2050	209	21800	2220	*	02	-	6165DA	-	6177	B-110	B-126	B-145
	2530	258	29500	3010	*		2530	258	29500	3010	*	02	-	6170DA	-	6177	B-110	B-126	B-145
	3150	321	29500	3010	*		3150	321	29500	3010	*	02	-	6175DA	-	6177	B-110	B-126	B-145
0.192	848	86.5	14700	1500	*	0.231	848	86.5	14700	1500	*	02	-	6130DB	-	7569	B-109	B-125	B-143
	979	99.8	14700	1500	*		979	99.8	14700	1500	*	02	-	6135DB	-	7569	B-109	B-125	B-144
	1230	125	16000	1630	*		1230	125	16000	1630	*	02	-	6140DB	-	7569	B-109	B-125	B-144
	1250	127	16000	1630	*		1250	127	16000	1630	*	02	-	6145DB	-	7569	B-109	B-125	B-144
	1760	179	22100	2250	*		1760	179	22100	2250	*	02	-	6160DA	-	7569	B-110	B-126	B-145
	2050	209	21800	2220	*		2050	209	21800	2220	*	02	-	6165DA	-	7569	B-110	B-126	B-145
	2530	258	29500	3010	*		2530	258	29500	3010	*	02	-	6170DA	-	7569	B-110	B-126	B-145
	3150	321	29500	3010	*		3150	321	29500	3010	*	02	-	6175DA	-	7569	B-110	B-126	B-145

6. "☆" indicates models manufactured with reducer and motor separately mounted on a common baseplate (horizontal shaft direction) or on an adaptor (vertical shaft direction). Consult us for details, including dimensions.
7. Allowable radial load (Pro) is the value at the midpoint of the slow speed shaft.
8. "(K)" indicates models with reduction ratios equal to nominal ratio. Refer to Table A-3 "6000SK Series (Actual Reduction Ratio)" on page A-4 for actual reduction ratio. Indicated reduction ratio is the same as actual reduction ratio for other models.
9. Maintain torque load during operation within "Output torque" in the table for models with "*" in the SF column. They cannot be operated with 100% motor rating.

Selection Tables Gearmotors

n_1: Motor Speed

0.25 kW	Hz	50Hz		60Hz	
	P	4	6	4	6
	n_1 r/min	1450	980	1750	1165

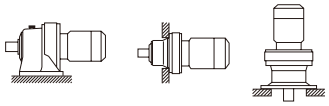

CHHM/CNHM CHFM/CNFM CVVM/CNVM

50Hz						60Hz						Nomenclature				Page of Dimension Sheet		
Output Speed n_2 [r/min]	Output Torque Tout [N·m]	[kgf·m]	Allowable Radial Load Pro [N]	[kgf]	SF	Output Speed n_2 [r/min]	Output Torque Tout [N·m]	[kgf·m]	Allowable Radial Load Pro [N]	[kgf]	SF	Input Capacity Symbol	– Frame Size	–	Reduction Ratio	CNHM CHHM	CNFM CHFM	CNVM CVVM
242	9.39	0.957	**795**	**81.1**	**1.14**	292	7.78	0.793	**749**	**76.3**	**1.14**	**03 -**	**6065**	**-**	**6**	**B-100**	**B-116**	**B-135**
			1390	141	1.39				1310	133	1.39	03 -	6070	-	6	B-100	B-116	B-135
			1390	141	1.63				1310	133	1.63	03 -	6075	-	6	B-100	B-116	B-135
			1930	197	2.37				1810	185	2.37	03 -	6080	-	6	B-100	B-116	B-135
181	12.5	1.28	**908**	**92.5**	**1.14**	219	10.4	1.06	**855**	**87.2**	**1.14**	**03 -**	**6065**	**-**	**8**	**B-100**	**B-116**	**B-135**
			1530	156	1.39				1450	147	1.39	03 -	6070	-	8	B-100	B-116	B-135
			1530	156	1.63				1450	147	1.63	03 -	6075	-	8	B-100	B-116	B-135
			2090	213	2.37				1970	201	2.37	03 -	6080	-	8	B-100	B-116	B-135
132	17.2	1.75	**1180**	**120**	**1.14**	159	14.3	1.45	**1160**	**118**	**1.14**	**03 -**	**6065**	**-**	**11**	**B-100**	**B-116**	**B-135**
			1720	175	1.39				1620	165	1.39	03 -	6070	-	11	B-100	B-116	B-135
			1720	175	1.63				1620	165	1.63	03 -	6075	-	11	B-100	B-116	B-135
			2310	236	2.37				2180	222	2.37	03 -	6080	-	11	B-100	B-116	B-135
112	20.3	2.07	**1180**	**120**	**1.14**	135	16.8	1.72	**1180**	**120**	**1.14**	**03 -**	**6065**	**-**	**13**	**B-100**	**B-116**	**B-135**
			1770	180	1.39				1710	174	1.39	03 -	6070	-	13	B-100	B-116	B-135
			1770	180	1.63				1710	174	1.63	03 -	6075	-	13	B-100	B-116	B-135
			2490	254	2.37				2340	239	2.37	03 -	6080	-	13	B-100	B-116	B-135
96.7	23.5	2.39	**1180**	**120**	**1.14**	117	19.4	1.98	**1180**	**120**	**1.14**	**03 -**	**6065**	**-**	**15**	**B-100**	**B-116**	**B-135**
			1770	180	1.39				1720	175	1.39	03 -	6070	-	15	B-100	B-116	B-135
			1770	180	1.63				1720	175	1.63	03 -	6075	-	15	B-100	B-116	B-135
			2560	261	2.37				2420	247	2.37	03 -	6080	-	15	B-100	B-116	B-135
85.3	26.6	2.71	**1180**	**120**	**1.13**	103	22.0	2.25	**1180**	**120**	**1.14**	**03 -**	**6065**	**-**	**17**	**B-100**	**B-116**	**B-135**
			1770	180	1.39				1770	180	1.39	03 -	6070	-	17	B-100	B-116	B-135
			1770	180	1.63				1770	180	1.63	03 -	6075	-	17	B-100	B-116	B-135
			2560	261	2.37				2540	258	2.37	03 -	6080	-	17	B-100	B-116	B-135
69.0	32.8	3.35	1180	120	0.91	83.3	27.2	2.77	1180	120	0.94	03 -	6065	-	21	B-100	B-116	B-135
			1770	**180**	**1.28**				**1770**	**180**	**1.28**	**03 -**	**6070**	**-**	**21**	**B-100**	**B-116**	**B-135**
			1770	180	1.63				1770	180	1.63	03 -	6075	-	21	B-100	B-116	B-135
			2560	261	1.91				2470	252	1.91	03 -	6080	-	21	B-100	B-116	B-135
			2560	261	2.20				2470	252	2.20	03 -	6085	-	21	B-100	B-116	B-135
58.0	39.1	3.99	**1770**	**180**	**1.18**	70.0	32.4	3.30	**1770**	**180**	**1.18**	**03 -**	**6075**	**-**	**25**	**B-100**	**B-116**	**B-135**
			2560	261	1.36				2540	259	1.36	03 -	6080	-	25	B-100	B-116	B-135
			2560	261	1.90				2540	259	1.90	03 -	6085	-	25	B-100	B-116	B-135
			3340	340	2.68				3340	340	2.68	03 -	6090	-	25	B-100	B-116	B-135
50.0	45.4	4.62	**1770**	**180**	**1.14**	60.3	37.6	3.83	**1770**	**180**	**1.14**	**03 -**	**6075**	**-**	**29**	**B-100**	**B-116**	**B-135**
			2560	261	1.36				2560	261	1.36	03 -	6080	-	29	B-100	B-116	B-135
			2560	261	1.87				2560	261	1.87	03 -	6085	-	29	B-100	B-116	B-135
			3340	340	2.50				3340	340	2.50	03 -	6090	-	29	B-100	B-116	B-135
41.4	54.7	5.58	**1770**	**180**	**1.09**	50.0	45.4	4.62	**1770**	**180**	**1.12**	**03 -**	**6075**	**-**	**35**	**B-100**	**B-116**	**B-135**
			2560	261	1.16				2560	261	1.32	03 -	6080	-	35	B-100	B-116	B-135
			2560	261	1.31				2560	261	1.48	03 -	6085	-	35	B-100	B-116	B-135
			3340	340	2.45				3340	340	2.45	03 -	6090	-	35	B-100	B-116	B-135
33.7	67.3	6.86	1500	152	0.89	40.7	55.7	5.68	1740	178	0.90	03 -	6075	-	43	B-100	B-116	B-135
			2560	**261**	**1.00**				**2560**	**261**	**1.00**	**03 -**	**6080**	**-**	**43**	**B-100**	**B-116**	**B-135**
			2560	261	1.18				2560	261	1.18	03 -	6085	-	43	B-100	B-116	B-135
			3340	340	1.74				3340	340	1.74	03 -	6090	-	43	B-100	B-116	B-135
			3340	340	2.41				3340	340	2.41	03 -	6095	-	43	B-100	B-116	B-135
28.4	79.8	8.13	2490	253	0.96	34.3	66.1	6.74	2560	261	0.96	03 -	6085	-	51	B-100	B-116	B-135
			3340	340	1.33				3340	340	1.33	03 -	6090	-	51	B-100	B-116	B-135
			3340	340	1.63				3340	340	1.69	03 -	6095	-	51	B-100	B-116	B-135
			5400	550	2.24				5400	550	2.24	03 -	6100	-	51	B-101	B-117	B-136
24.6	92.3	9.41	2390	244	0.94	29.7	76.5	7.79	2540	259	0.94	03 -	6085	-	59	B-100	B-116	B-135
			3340	**340**	**1.24**				**3340**	**340**	**1.24**	**03 -**	**6090**	**-**	**59**	**B-100**	**B-116**	**B-135**
			3340	340	1.34				3340	340	1.49	03 -	6095	-	59	B-100	B-116	B-135
			5400	550	2.06				5400	550	2.06	03 -	6100	-	59	B-101	B-117	B-136
			5400	550	2.72				5400	550	2.83	03 -	6105	-	59	B-101	B-117	B-136

1. Combinations in **bold** are the recommended models for operations for 10 hours/day with uniform load (service factor is about 1.0 for motor rating at 50Hz).
2. Motor slippage may affect n_1 and n_2. Refer to technical data for details.
3. CNHM, CHHM, CNFM, CHFM, CNVM, and CVVM indicate types. Refer to page B-10 for details.
4. Lubrication method is different for each model. Refer to "Lubrication" section in page F-4~F-5 for details.
5. "6" at the end of "input capacity symbol" indicates models with 6P motor. Other models come with 4P motor.

Selection Tables Gearmotors

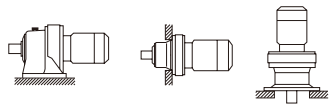

CHHM/CNHM CHFM/CNFM CVVM/CNVM

n_1: Motor Speed

0.25 kW	Hz	50Hz		60Hz	
	P	4	6	4	6
	n_1 r/min	1450	980	1750	1165

50Hz						60Hz						Nomenclature				Page of Dimension Sheet		
Output Speed n_2 [r/min]	Output Torque Tout [N·m]	[kgf·m]	Allowable Radial Load Pro [N]	[kgf]	SF	Output Speed n_2 [r/min]	Output Torque Tout [N·m]	[kgf·m]	Allowable Radial Load Pro [N]	[kgf]	SF	Input Capacity Symbol	–	Frame Size	– Reduction Ratio	CNHM CHHM	CNFM CHFM	CNVM CVVM
			3340	**340**	**1.01**				**3340**	**340**	**1.01**	**03 -**		**6090**	**- 71**	**B-100**	**B-116**	**B-135**
20.4	111	11.3	3340	340	1.11	24.6	92	9.4	3340	340	1.20	03 -		6095	- 71	B-100	B-116	B-135
			5400	550	1.74				5400	550	1.74	03 -		6100	- 71	B-101	B-117	B-136
			5400	550	2.02				5400	550	2.24	03 -		6105	- 71	B-101	B-117	B-136
			3340	**340**	**1.05**				**3340**	**340**	**1.20**	**03 -**		**6095**	**- 87**	**B-100**	**B-116**	**B-135**
16.7	136	13.9	5400	550	1.73	20.1	113	11.5	5400	550	1.73	03 -		6100	- 87	B-101	B-117	B-136
			5400	550	2.01				5400	550	2.26	03 -		6105	- 87	B-101	B-117	B-136
			3340	340	1.17				3340	340	1.42	03 -		6095DA	- 104	B-108	B-124	B-143
13.9	154	15.7	5400	550	1.62	16.8	128	13.0	5400	550	1.63	03 -		6100DA	- 104	B-108	B-124	B-143
			5400	550	1.63				5400	550	1.63	03 -		6105DA	- 104	B-108	B-124	B-143
12.2	186	19.0	**5400**	**550**	**1.14**	14.7	154	15.7	**5400**	**550**	**1.14**	**03 -**		**6105**	**- 119**	B-101	B-117	B-136
			3340	340	0.89				3340	340	1.08	03 -		6095DA	- 121	B-108	B-124	B-143
12.0	179	18.3	5400	550	1.39	14.5	149	15.1	5400	550	1.63	03 -		6100DA	- 121	B-108	B-124	B-143
			5400	550	1.63				5400	550	1.63	03 -		6105DA	- 121	B-108	B-124	B-143
			9810	1000	2.93				9810	1000	3.53	03 -		6120DB	- 121	B-108	B-124	B-143
	150	15.3	3340	340	*		150	15.3	3340	340	*	03 -		6090DA	- 143	B-108	B-124	B-143
			3340	340	0.87				3340	340	1.04	03 -		6095DA	- 143	B-108	B-124	B-143
			5400	550	1.18				5400	550	1.42	03 -		6100DA	- 143	B-108	B-124	B-143
10.1	212	21.6	5400	550	1.42	12.2	176	17.9	5400	550	1.63	03 -		6105DA	- 143	B-108	B-124	B-143
			9810	1000	1.63				9810	1000	1.63	03 -		6120DA	- 143	B-108	B-124	B-143
			9810	1000	2.48				9810	1000	2.99	03 -		6120DB	- 143	B-108	B-124	B-143
			9810	1000	2.97				9810	1000	3.59	03 -		6125DB	- 143	B-108	B-124	B-143
	200	20.4	3340	340	*		200	20.4	3340	340	*	03 -		6095DA	- 165	B-108	B-124	B-143
			3340	340	0.82				3340	340	0.98	03 -		6095DA	- 165	B-108	B-124	B-143
			5400	**550**	**1.02**				**5400**	**550**	**1.23**	**03 -**		**6100DA**	**- 165**	**B-108**	**B-124**	**B-143**
8.79	245	24.9	5400	550	1.23	10.6	203	20.7	5400	550	1.48	03 -		6105DA	- 165	B-108	B-124	B-143
			9810	1000	1.63				9810	1000	1.63	03 -		6120DA	- 165	B-108	B-124	B-143
			9810	1000	2.15				9810	1000	2.59	03 -		6120DB	- 165	B-108	B-124	B-143
			9810	1000	2.58				9810	1000	3.11	03 -		6125DB	- 165	B-108	B-124	B-143
	200	20.4	3340	340	*		200	20.4	3340	340	*	03 -		6095DA	- 195	B-108	B-124	B-143
			5400	**550**	**1.04**				**5400**	**550**	**1.25**	**03 -**		**6105DA**	**- 195**	**B-108**	**B-124**	**B-143**
			9810	1000	1.63				9810	1000	1.63	03 -		6120DA	- 195	B-108	B-124	B-143
7.44	289	29.5	9810	1000	1.82	8.97	239	24.4	9810	1000	2.19	03 -		6120DB	- 195	B-108	B-124	B-143
			9810	1000	2.18				9810	1000	2.63	03 -		6125DB	- 195	B-108	B-124	B-143
			14700	1500	2.70				14700	1500	3.26	03 -		6130DB	- 195	B-109	B-125	B-144
	250	25.5	5400	550	*		250	25.5	5400	550	*	03 -		6100DA	- 231	B-108	B-124	B-143
			4940	504	0.88				5400	550	1.06	03 -		6105DA	- 231	B-108	B-124	B-143
			9810	1000	1.52				9810	1000	1.63	03 -		6120DA	- 231	B-108	B-124	B-143
			9810	1000	1.52				9810	1000	1.84	03 -		6120DB	- 231	B-108	B-124	B-143
6.28	342	34.9	9810	1000	1.63	7.58	284	28.9	9810	1000	1.63	03 -		6125DA	- 231	B-108	B-124	B-143
			9810	1000	1.84				9810	1000	2.22	03 -		6125DB	- 231	B-108	B-124	B-143
			14700	1500	2.28				14700	1500	2.75	03 -		6130DB	- 231	B-109	B-125	B-144
			14700	1500	2.75				14700	1500	3.31	03 -		6135DB	- 231	B-109	B-125	B-144
	300	30.6	5400	550	*		300	30.6	5400	550	*	03 -		6105DA	- 273	B-108	B-124	B-143
			9810	1000	1.29				9810	1000	1.56	03 -		6120DA	- 273	B-108	B-124	B-143
			9810	1000	1.56				9810	1000	1.63	03 -		6125DA	- 273	B-108	B-124	B-143
5.31	405	41.2	9810	1000	1.56	6.41	335	34.2	9810	1000	1.88	03 -		6125DB	- 273	B-108	B-124	B-143
			14700	1500	1.63				14700	1500	1.63	03 -		6130DA	- 273	B-109	B-125	B-144
			14700	1500	1.93				14700	1500	2.33	03 -		6130DB	- 273	B-109	B-125	B-144
			14700	1500	2.32				14700	1500	2.80	03 -		6135DB	- 273	B-109	B-125	B-144

6. "☆" indicates models manufactured with reducer and motor separately mounted on a common baseplate (horizontal shaft direction) or on an adaptor (vertical shaft direction). Consult us for details, including dimensions.
7. Allowable radial load (Pro) is the value at the midpoint of the slow speed shaft.
8. "(K)" indicates models with reduction ratios equal to nominal ratio. Refer to Table A-3 "6000SK Series (Actual Reduction Ratio)" on page A-4 for actual reduction ratio. Indicated reduction ratio is the same as actual reduction ratio for other models.
9. Maintain torque load during operation within "Output torque" in the table for models with "*" in the SF column. They cannot be operated with 100% motor rating.

Selection Tables Gearmotors

n_1: Motor Speed

0.25 kW	Hz		50Hz		60Hz	
	P		4	6	4	6
	n_1	r/min	1450	980	1750	1165

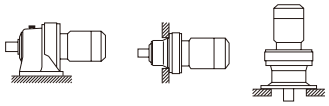

CHHM/CNHM CHFM/CNFM CVVM/CNVM

50Hz						60Hz						Nomenclature				Page of Dimension Sheet		
Output Speed n_2 [r/min]	Output Torque Tout [N·m]	[kgf·m]	Allowable Radial Load Pro [N]	[kgf]	SF	Output Speed n_2 [r/min]	Output Torque Tout [N·m]	[kgf·m]	Allowable Radial Load Pro [N]	[kgf]	SF	Input Capacity Symbol	-	Frame Size	- Reduction Ratio	CNHM CHHM	CNFM CHFM	CNVM CVVM
4.55	473	48.2	9810	1000	1.10	5.49	392	39.9	9810	1000	1.33	03	-	6120DA	- 319	B-108	B-124	B-143
			9810	1000	1.33				9810	1000	1.61	03	-	6125DA	- 319	B-108	B-124	B-143
			14700	1500	1.63				14700	1500	1.63	03	-	6130DA	- 319	B-109	B-125	B-144
			14700	1500	1.65				14700	1500	1.99	03	-	6130DB	- 319	B-109	B-125	B-144
			14700	1500	1.63				14700	1500	1.63	03	-	6135DA	- 319	B-109	B-125	B-144
			14700	1500	1.99				14700	1500	2.40	03	-	6135DB	- 319	B-109	B-125	B-144
			16000	1630	2.59				16000	1630	3.13	03	-	6140DB	- 319	B-109	B-125	B-144
			16000	1630	2.90				16000	1630	3.50	03	-	6145DB	- 319	B-109	B-125	B-144
3.85	559	56.9	9810	1000	1.13	4.64	463	47.2	9810	1000	1.36	03	-	6125DA	- 377	B-108	B-124	B-143
			14700	1500	1.40				14700	1500	1.63	03	-	6130DA	- 377	B-109	B-125	B-144
			14700	1500	1.63				14700	1500	1.63	03	-	6135DA	- 377	B-109	B-125	B-144
			14700	1500	1.68				14700	1500	2.03	03	-	6135DB	- 377	B-109	B-125	B-144
			16000	1630	1.63				16000	1630	1.63	03	-	6140DA	- 377	B-109	B-125	B-144
			16000	1630	2.19				16000	1630	2.65	03	-	6140DB	- 377	B-109	B-125	B-144
			16000	1630	2.45				16000	1630	2.96	03	-	6145DB	- 377	B-109	B-125	B-144
3.07	525	53.5	9810	1000	*	3.70	525	53.5	9810	1000	*	03	-	6120DA	- 473	B-108	B-124	B-143
	701	71.5	9810	1000	0.90		581	59.2	9810	1000	1.08	03	-	6125DA	- 473	B-108	B-124	B-143
			14700	1500	1.11				14700	1500	1.34	03	-	6130DA	- 473	B-109	B-125	B-144
			14700	1500	1.34				14700	1500	1.62	03	-	6135DA	- 473	B-109	B-125	B-144
			16000	1630	1.63				16000	1630	1.63	03	-	6140DA	- 473	B-109	B-125	B-144
			16000	1630	1.75				16000	1630	2.11	03	-	6140DB	- 473	B-109	B-125	B-144
			16000	1630	1.95				16000	1630	2.36	03	-	6145DB	- 473	B-109	B-125	B-144
2.59	630	64.2	9810	1000	*	3.13	630	64.2	9810	1000	*	03	-	6125DA	- 559	B-108	B-124	B-143
	828	84.4	14700	1500	1.13		686	70.0	14700	1500	1.37	03	-	6135DA	- 559	B-109	B-125	B-144
			16000	1630	1.48				16000	1630	1.63	03	-	6140DA	- 559	B-109	B-125	B-144
			16000	1630	1.48				16000	1630	1.78	03	-	6140DB	- 559	B-109	B-125	B-144
			16000	1630	1.63				16000	1630	1.63	03	-	6145DA	- 559	B-109	B-125	B-144
			16000	1630	1.65				16000	1630	2.00	03	-	6145DB	- 559	B-109	B-125	B-144
2.23	962	98.0	14700	1500	1.09	2.70	797	81.2	14700	1500	1.32	03	-	6135DA	- 649	B-109	B-125	B-144
			16000	1630	1.27				16000	1630	1.54	03	-	6140DA	- 649	B-109	B-125	B-144
			16000	1630	1.42				16000	1630	1.63	03	-	6145DA	- 649	B-109	B-125	B-144
1.98	780	79.5	14700	1500	*	2.39	780	79.5	14700	1500	*	03	-	6130DA	- 731	B-109	B-125	B-144
	1080	110	14700	1500	0.87		898	91.5	14700	1500	1.05	03	-	6135DA	- 731	B-109	B-125	B-144
			16000	1630	1.13				16000	1630	1.36	03	-	6140DA	- 731	B-109	B-125	B-144
			16000	1630	1.26				16000	1630	1.53	03	-	6145DA	- 731	B-109	B-125	B-144
1.72	940	95.8	14700	1500	*	2.08	940	95.8	14700	1500	*	03	-	6135DA	- 841	B-109	B-125	B-144
	1250	127	**16000**	**1630**	**1.10**		1030	105	**16000**	**1630**	**1.21**	**03**	**-**	**6145DA**	**- 841**	**B-109**	**B-125**	**B-144**
			16000	1630	1.10				16000	1630	1.33	03	-	6145DB	- 841	B-109	B-125	B-144
1.45	1050	107	14700	1500	*	1.74	1050	107	14700	1500	*	03	-	6135DA	- 1003	B-109	B-125	B-144
	1230	125	16000	1630	*		1230	125	16000	1630	*	03	-	6140DA	- 1003	B-109	B-125	B-144
	1490	152	16000	1630	0.92		1230	126	16000	1630	1.11	03	-	6145DA	- 1003	B-109	B-125	B-144
1.16	1370	140	15700	1600	*	1.40	1370	140	15700	1600	*	03	-	6145DA	- 1247	B-109	B-125	B-144
0.702	2100	214	22100	2250	*	0.847	2100	214	22100	2250	*	03	-	6165DA	- 2065	B-110	B-126	B-145
0.572	2530	258	29500	3010	*	0.690	2530	258	29500	3010	*	03	-	6170DA	- 2537	B-110	B-126	B-145
0.476	3150	321	29500	3010	*	0.575	3150	321	29500	3010	*	03	-	6175DA	- 3045	B-110	B-126	B-145

1. Combinations in **bold** are the recommended models for operations for 10 hours/day with uniform load (service factor is about 1.0 for motor rating at 50Hz).
2. Motor slippage may affect n_1 and n_2. Refer to technical data for details.
3. CNHM, CHHM, CNFM, CHFM, CNVM, and CVVM indicate types. Refer to page B-10 for details.
4. Lubrication method is different for each model. Refer to "Lubrication" section in page F-4~F-5 for details.
5. "6" at the end of "input capacity symbol" indicates models with 6P motor. Other models come with 4P motor.

Selection Tables Gearmotors

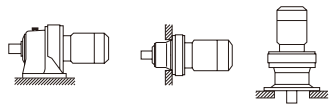

n_1: Motor Speed

0.4 kW	Hz	50Hz		60Hz	
	P	4	6	4	6
	n_1 r/min	1450	980	1750	1165

50Hz						60Hz						Nomenclature						Page of Dimension Sheet		
Output Speed n_2 [r/min]	Output Torque Tout [N·m]	[kgf·m]	Allowable Radial Load Pro [N]	[kgf]	SF	Output Speed n_2 [r/min]	Output Torque Tout [N·m]	[kgf·m]	Allowable Radial Load Pro [N]	[kgf]	SF	Input Capacity Symbol	–	Frame Size	–	Reduction Ratio		CNHM CHHM	CNFM CHFM	CNVM CVVM
580	6.26	0.638	1180	120	2.78	700	5.18	0.528	1120	114	2.78	05	-	6070SK	-	2.5	(K)	B-98	-	B-133
			1180	120	3.47				1120	114	3.47	05	-	6075SK	-	2.5	(K)	B-98	-	B-133
			1310	134	4.12				1250	127	4.12	05	-	6080SK	-	2.5	(K)	B-98	-	B-133
483	7.51	0.765	1240	126	2.65	583	6.22	0.634	1180	120	2.65	05	-	6070SK	-	3	(K)	B-98	-	B-133
			1240	126	3.31				1180	120	3.31	05	-	6075SK	-	3	(K)	B-98	-	B-133
			1380	141	4.12				1300	133	4.12	05	-	6080SK	-	3	(K)	B-98	-	B-133
363	10.0	1.02	1340	137	2.34	438	8.29	0.846	1290	131	2.34	05	-	6070SK	-	4	(K)	B-98	-	B-133
			1340	137	2.92				1290	131	2.92	05	-	6075SK	-	4	(K)	B-98	-	B-133
			1500	153	4.12				1420	145	4.12	05	-	6080SK	-	4	(K)	B-98	-	B-133
290	12.5	1.28	1370	140	2.22	350	10.4	1.06	1290	132	2.22	05	-	6070SK	-	5	(K)	B-98	-	B-133
			1370	140	2.78				1290	132	2.78	05	-	6075SK	-	5	(K)	B-98	-	B-133
			1640	167	3.88				1550	158	3.88	05	-	6080SK	-	5	(K)	B-98	-	B-133
242	15.0	1.53	1370	140	1.96	292	12.4	1.27	1290	132	1.96	05	-	6070SK	-	6	(K)	B-98	-	B-133
			1370	140	2.45				1290	132	2.45	05	-	6075SK	-	6	(K)	B-98	-	B-133
			1720	175	3.24				1630	166	3.24	05	-	6080SK	-	6	(K)	B-98	-	B-133
			1720	175	4.05				1630	166	4.05	05	-	6085SK	-	6	(K)	B-98	-	B-133
			1370	**140**	**1.02**				**1290**	**132**	**1.02**	**05**	**-**	**6075**	**-**	**6**		**B-100**	**B-116**	**B-135**
			1920	196	1.48				1810	184	1.48	05	-	6080	-	6		B-100	B-116	B-135
			1920	196	1.95				1810	184	1.95	05	-	6085	-	6		B-100	B-116	B-135
			2860	292	2.88				2690	275	2.88	05	-	6090	-	6		B-100	B-116	B-135
181	20.0	2.04	1510	154	1.47	219	16.6	1.69	1430	145	1.47	05	-	6070SK	-	8	(K)	B-98	-	B-133
			1510	154	1.84				1430	145	1.84	05	-	6075SK	-	8	(K)	B-98	-	B-133
			1820	186	2.74				1730	176	2.74	05	-	6080SK	-	8	(K)	B-98	-	B-133
			1820	186	3.43				1730	176	3.43	05	-	6085SK	-	8	(K)	B-98	-	B-133
			3280	334	3.76				3110	317	3.76	05	-	6090SK	-	8	(K)	B-98	-	B-133
			3280	334	4.43				3110	317	4.43	05	-	6095SK	-	8	(K)	B-98	-	B-133
			1510	**154**	**1.02**				**1430**	**145**	**1.02**	**05**	**-**	**6075**	**-**	**8**		**B-100**	**B-116**	**B-135**
			2080	212	1.48				1960	200	1.48	05	-	6080	-	8		B-100	B-116	B-135
			2080	212	1.95				1960	200	1.95	05	-	6085	-	8		B-100	B-116	B-135
			3190	326	2.88				3000	306	2.88	05	-	6090	-	8		B-100	B-116	B-135
145	25.0	2.55	**1680**	**171**	**1.13**	175	20.7	2.11	**1590**	**162**	**1.13**	**05**	**-**	**6070SK**	**-**	**10**	**(K)**	**B-98**	**-**	**B-133**
			1680	171	1.42				1590	162	1.42	05	-	6075SK	-	10	(K)	B-98	-	B-133
			1930	197	2.20				1840	188	2.20	05	-	6080SK	-	10	(K)	B-98	-	B-133
			1930	197	2.75				1840	188	2.75	05	-	6085SK	-	10	(K)	B-98	-	B-133
			3590	366	3.50				3390	346	3.50	05	-	6090SK	-	10	(K)	B-98	-	B-133
			3590	366	4.43				3390	346	4.43	05	-	6095SK	-	10	(K)	B-98	-	B-133
132	27.5	2.81	**1680**	**171**	**1.02**	159	22.8	2.33	**1590**	**162**	**1.02**	**05**	**-**	**6075**	**-**	**11**		**B-100**	**B-116**	**B-135**
			2300	234	1.48				2160	220	1.48	05	-	6080	-	11		B-100	B-116	B-135
			2300	234	1.95				2160	220	1.95	05	-	6085	-	11		B-100	B-116	B-135
			3340	340	2.88				3340	340	2.88	05	-	6090	-	11		B-100	B-116	B-135
112	32.5	3.32	**1770**	**180**	**1.02**	135	27.0	2.75	**1680**	**171**	**1.02**	**05**	**-**	**6075**	**-**	**13**		**B-100**	**B-116**	**B-135**
			2470	251	1.48				2320	237	1.48	05	-	6080	-	13		B-100	B-116	B-135
			2470	251	1.95				2320	237	1.95	05	-	6085	-	13		B-100	B-116	B-135
			3340	340	2.88				3340	340	2.88	05	-	6090	-	13		B-100	B-116	B-135
96.7	37.5	3.83	**1770**	**180**	**1.02**	117	31.1	3.17	**1680**	**171**	**1.02**	**05**	**-**	**6075**	**-**	**15**		**B-100**	**B-116**	**B-135**
			2550	260	1.48				2400	245	1.48	05	-	6080	-	15		B-100	B-116	B-135
			2550	260	1.95				2400	245	1.95	05	-	6085	-	15		B-100	B-116	B-135
			3340	340	2.88				3340	340	2.88	05	-	6090	-	15		B-100	B-116	B-135
85.3	42.5	4.34	**1770**	**180**	**1.02**	103	35.3	3.59	**1770**	**180**	**1.02**	**05**	**-**	**6075**	**-**	**17**		**B-100**	**B-116**	**B-135**
			2560	261	1.48				2510	256	1.48	05	-	6080	-	17		B-100	B-116	B-135
			2560	261	1.95				2510	256	1.95	05	-	6085	-	17		B-100	B-116	B-135
			3340	340	2.88				3340	340	2.88	05	-	6090	-	17		B-100	B-116	B-135
69.0	52.6	5.36	**1770**	**180**	**1.02**	83.3	43.5	4.44	**1770**	**180**	**1.02**	**05**	**-**	**6075**	**-**	**21**		**B-100**	**B-116**	**B-135**
			2560	261	1.20				2450	250	1.20	05	-	6080	-	21		B-100	B-116	B-135
			2560	261	1.38				2450	250	1.38	05	-	6085	-	21		B-100	B-116	B-135
			3340	340	1.90				3340	340	1.90	05	-	6090	-	21		B-100	B-116	B-135

6. "☆" indicates models manufactured with reducer and motor separately mounted on a common baseplate (horizontal shaft direction) or on an adaptor (vertical shaft direction). Consult us for details, including dimensions.
7. Allowable radial load (Pro) is the value at the midpoint of the slow speed shaft.
8. "(K)" indicates models with reduction ratios equal to nominal ratio. Refer to Table A-3 "6000SK Series (Actual Reduction Ratio)" on page A-4 for actual reduction ratio. Indicated reduction ratio is the same as actual reduction ratio for other models.
9. Maintain torque load during operation within "Output torque" in the table for models with "*" in the SF column. They cannot be operated with 100% motor rating.

Selection Tables Gearmotors

n_1: Motor Speed

0.4 kW	Hz	50Hz		60Hz	
	P	4	6	4	6
	n_1 r/min	1450	980	1750	1165

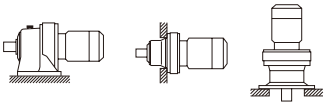

CHHM/CNHM CHFM/CNFM CVVM/CNVM

50Hz						60Hz						Nomenclature				Page of Dimension Sheet		
Output Speed n_2 [r/min]	Output Torque Tout [N·m]	[kgf·m]	Allowable Radial Load Pro [N]	[kgf]	SF	Output Speed n_2 [r/min]	Output Torque Tout [N·m]	[kgf·m]	Allowable Radial Load Pro [N]	[kgf]	SF	Input Capacity Symbol	– Frame Size	– Reduction Ratio		CNHM CHHM	CNFM CHFM	CNVM CVVM
			2560	**261**	**1.19**				**2520**	**256**	**1.19**	**05 -**	**6085**	**- 25**		**B-100**	**B-116**	**B-135**
58.0	62.6	6.38	3340	340	1.68	70.0	51.8	5.28	3340	340	1.68	05 -	6090	- 25		B-100	B-116	B-135
			3340	340	2.17				3340	340	2.17	05 -	6095	- 25		B-100	B-116	B-135
			2560	**261**	**1.17**				**2560**	**261**	**1.17**	**05 -**	**6085**	**- 29**		**B-100**	**B-116**	**B-135**
50.0	72.6	7.40	3340	340	1.56	60.3	60.1	6.13	3340	340	1.56	05 -	6090	- 29		B-100	B-116	B-135
			3340	340	1.96				3340	340	1.96	05 -	6095	- 29		B-100	B-116	B-135
			2560	261	0.82				2560	261	0.93	05 -	6085	- 35		B-100	B-116	B-135
			3340	340	1.53				3340	340	1.53	05 -	6090	- 35		B-100	B-116	B-135
41.4	87.6	8.93	3340	340	1.90	50.0	72.6	7.40	3340	340	1.90	05 -	6095	- 35		B-100	B-116	B-135
			5400	550	2.44				5400	550	2.44	05 -	6100	- 35		B-101	B-117	B-136
			5400	550	3.00				5400	550	3.00	05 -	6105	- 35		B-101	B-117	B-136
			3340	**340**	**1.09**				**3340**	**340**	**1.09**	**05 -**	**6090**	**- 43**		**B-100**	**B-116**	**B-135**
33.7	108	11.0	3340	340	1.51	40.7	89.2	9.09	3340	340	1.51	05 -	6095	- 43		B-100	B-116	B-135
			5400	550	1.95				5400	550	1.95	05 -	6100	- 43		B-101	B-117	B-136
			5400	550	2.70				5400	550	2.70	05 -	6105	- 43		B-101	B-117	B-136
			3320	**339**	**1.02**				**3340**	**340**	**1.06**	**05 -**	**6095**	**- 51**		**B-100**	**B-116**	**B-135**
			5400	550	1.40				5400	550	1.40	05 -	6100	- 51		B-101	B-117	B-136
28.4	128	13.0	5400	550	1.94	34.3	106	10.8	5400	550	1.94	05 -	6105	- 51		B-101	B-117	B-136
			7610	776	2.36				7610	776	2.36	05 -	6110	- 51		B-101	B-117	B-136
			7610	776	2.78				7610	776	2.78	05 -	6115	- 51		B-101	B-117	B-136
			3300	336	0.84				3340	340	0.93	05 -	6095	- 59		B-100	B-116	B-135
			5400	**550**	**1.29**				**5400**	**550**	**1.29**	**05 -**	**6100**	**- 59**		**B-101**	**B-117**	**B-136**
24.6	148	15.1	5400	550	1.70	29.7	122	12.5	5400	550	1.77	05 -	6105	- 59		B-101	B-117	B-136
			7610	776	2.15				7610	776	2.15	05 -	6110	- 59		B-101	B-117	B-136
			7610	776	2.53				7610	776	2.53	05 -	6115	- 59		B-101	B-117	B-136
			5400	**550**	**1.09**				**5400**	**550**	**1.09**	**05 -**	**6100**	**- 71**		**B-101**	**B-117**	**B-136**
			5400	550	1.27				5400	550	1.40	05 -	6105	- 71		B-101	B-117	B-136
20.4	178	18.1	7610	776	1.67	24.6	147	15.0	7610	776	1.67	05 -	6110	- 71		B-101	B-117	B-136
			7610	776	1.90				7610	776	1.90	05 -	6115	- 71		B-101	B-117	B-136
			9810	1000	2.39				9810	1000	2.39	05 -	6120	- 71		B-101	B-117	B-136
			9810	1000	2.85				9810	1000	3.00	05 -	6125	- 71		B-101	B-117	B-136
			5400	**550**	**1.08**				**5400**	**550**	**1.08**	**05 -**	**6100**	**- 87**		**B-101**	**B-117**	**B-136**
			5400	550	1.26				5400	550	1.41	05 -	6105	- 87		B-101	B-117	B-136
16.7	218	22.2	7610	776	1.65	20.1	180	18.4	7610	776	1.65	05 -	6110	- 87		B-101	B-117	B-136
			7610	776	1.90				7610	776	1.90	05 -	6115	- 87		B-101	B-117	B-136
			9810	1000	2.36				9810	1000	2.36	05 -	6120	- 87		B-101	B-117	B-136
			9810	1000	2.58				9810	1000	2.83	05 -	6125	- 87		B-101	B-117	B-136
	150	15.3	3340	340	*		150	15.3	3340	340	*	05 -	6090DA	- 104		B-108	B-124	B-143
	181	18.4	3340	340	*		181	18.4	3340	340	*	05 -	6095DA	- 104		B-108	B-124	B-143
13.9			**5400**	**550**	**1.01**	16.8			**5400**	**550**	**1.02**	**05 -**	**6100DA**	**- 104**		B-108	B-124	B-143
	247	25.1	5400	550	1.07		204	20.8	5400	550	1.07	05 -	6105DA	- 104		B-108	B-124	B-143
			9810	1000	2.13				9810	1000	2.57	05 -	6120DB	- 104		B-108	B-124	B-143
			9810	1000	2.55				9810	1000	3.08	05 -	6125DB	- 104		B-108	B-124	B-143
	150	15.3	3340	340	*		150	15.3	3340	340	*	05 -	6090DA	- 121		B-108	B-124	B-143
	160	16.4	3340	340	*		160	16.4	3340	340	*	05 -	6095DA	- 121		B-108	B-124	B-143
12.0			**5400**	**550**	**1.07**	14.5			**5400**	**550**	**1.02**	**05 -**	**6105DA**	**- 121**		B-108	B-124	B-143
	287	29.2	9810	1000	1.83		238	24.2	9810	1000	2.21	05 -	6120DB	- 121		B-108	B-124	B-143
			9810	1000	2.17				9810	1000	2.62	05 -	6125DB	- 121		B-108	B-124	B-143
			14700	1500	2.72				14700	1500	3.28	05 -	6130DB	- 121		B-109	B-125	B-144

1. Combinations in **bold** are the recommended models for operations for 10 hours/day with uniform load (service factor is about 1.0 for motor rating at 50Hz).
2. Motor slippage may affect n_1 and n_2. Refer to technical data for details.
3. CNHM, CHHM, CNFM, CHFM, CNVM, and CVVM indicate types. Refer to page B-10 for details.
4. Lubrication method is different for each model. Refer to "Lubrication" section in page F-4~F-5 for details.
5. "6" at the end of "input capacity symbol" indicates models with 6P motor. Other models come with 4P motor.

Selection Tables Gearmotors

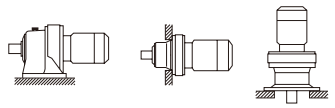

n_1: Motor Speed

0.4 kW	Hz	50Hz		60Hz	
	P	4	6	4	6
	n_1 r/min	1450	980	1750	1165

50Hz						60Hz						Nomenclature	Page of Dimension Sheet		
Output Speed n_2 [r/min]	Output Torque Tout [N·m]	[kgf·m]	Allowable Radial Load Pro [N]	[kgf]	SF	Output Speed n_2 [r/min]	Output Torque Tout [N·m]	[kgf·m]	Allowable Radial Load Pro [N]	[kgf]	SF	Input Capacity Symbol - Frame Size - Reduction Ratio	CNHM CHHM	CNFM CHFM	CNVM CVVM
10.1	183	18.7	3340	340	*	12.2	183	18.7	3340	340	*	05 - 6095DA - 143	B-108	B-124	B-143
	250	25.5	5400	550	*		250	25.5	5400	550	*	05 - 6100DA - 143	B-108	B-124	B-143
	339	34.6	5400	550	0.88		281	28.6	5400	550	1.02	05 - 6105DA - 143	B-108	B-124	B-143
			9810	**1000**	**1.02**				**9810**	**1000**	**1.02**	**05 - 6120DA - 143**	B-108	B-124	B-143
			9810	1000	1.55				9810	1000	1.87	05 - 6120DB - 143	B-108	B-124	B-143
			9810	1000	1.86				9810	1000	2.24	05 - 6125DB - 143	B-108	B-124	B-143
			14700	1500	2.30				14700	1500	2.78	05 - 6130DB - 143	B-109	B-125	B-144
			14700	1500	2.77				14700	1500	3.35	05 - 6135DB - 143	B-109	B-125	B-144
8.79	250	25.5	5400	550	*	10.6	250	25.5	5400	550	*	05 - 6100DA - 165	B-108	B-124	B-143
	300	30.6	5400	550	*		300	30.6	5400	550	*	05 - 6105DA - 165	B-108	B-124	B-143
	391	39.9	**9810**	**1000**	**1.02**		324	33.0	**9810**	**1000**	**1.02**	**05 - 6120DA - 165**	**B-108**	**B-124**	**B-143**
			9810	1000	1.34				9810	1000	1.62	05 - 6120DB - 165	B-108	B-124	B-143
			9810	1000	1.61				9810	1000	1.94	05 - 6125DB - 165	B-108	B-124	B-143
			14700	1500	1.99				14700	1500	2.41	05 - 6130DB - 165	B-109	B-125	B-144
			14700	1500	2.40				14700	1500	2.90	05 - 6135DB - 165	B-109	B-125	B-144
7.44	250	25.5	5400	550	*	8.97	250	25.5	5400	550	*	05 - 6100DA - 195	B-108	B-124	B-143
	300	30.6	5400	550	*		300	30.6	5400	550	*	05 - 6105DA - 195	B-108	B-124	B-143
	462	47.1	**9810**	**1000**	**1.02**		383	39.1	**9810**	**1000**	**1.02**	**05 - 6120DA - 195**	**B-108**	**B-124**	**B-143**
			9810	1000	1.14				9810	1000	1.37	05 - 6120DB - 195	B-108	B-124	B-143
			9810	1000	1.36				9810	1000	1.64	05 - 6125DB - 195	B-108	B-124	B-143
			14700	1500	1.69				14700	1500	2.04	05 - 6130DB - 195	B-109	B-125	B-144
			14700	1500	2.03				14700	1500	2.45	05 - 6135DB - 195	B-109	B-125	B-144
			16000	1630	2.65				16000	1630	3.20	05 - 6140DB - 195	B-109	B-125	B-144
			16000	1630	2.94				16000	1630	3.54	05 - 6145DB - 195	B-109	B-125	B-144
6.28	300	30.6	5400	550	*	7.58	300	30.6	5400	550	*	05 - 6105DA - 231	B-108	B-124	B-143
	548	55.8	**9810**	**1000**	**1.02**		454	46.3	**9810**	**1000**	**1.02**	**05 - 6125DA - 231**	**B-108**	**B-124**	**B-143**
			9810	1000	1.15				9810	1000	1.39	05 - 6125DB - 231	B-108	B-124	B-143
			14700	1500	1.42				14700	1500	1.72	05 - 6130DB - 231	B-109	B-125	B-144
			14700	1500	1.72				14700	1500	2.07	05 - 6135DB - 231	B-109	B-125	B-144
			16000	1630	2.24				16000	1630	2.70	05 - 6140DB - 231	B-109	B-125	B-144
			16000	1630	2.44				16000	1630	2.95	05 - 6145DB - 231	B-109	B-125	B-144
5.31	522	53.2	9810	1000	*	6.41	522	53.2	9810	1000	*	05 - 6120DA - 273	B-108	B-124	B-143
	647	66.0	9810	1000	0.97		536	54.7	9810	1000	1.02	05 - 6125DA - 273	B-108	B-124	B-143
			9810	1000	0.97				9810	1000	1.17	05 - 6125DB - 273	B-108	B-124	B-143
			14700	**1500**	**1.02**				**14700**	**1500**	**1.02**	**05 - 6130DA - 273**	**B-109**	**B-125**	**B-144**
			14700	1500	1.21				14700	1500	1.45	05 - 6130DB - 273	B-109	B-125	B-144
			14700	1500	1.45				14700	1500	1.75	05 - 6135DB - 273	B-109	B-125	B-144
			16000	1630	1.89				16000	1630	2.28	05 - 6140DB - 273	B-109	B-125	B-144
			16000	1630	2.07				16000	1630	2.49	05 - 6145DB - 273	B-109	B-125	B-144
			22100	2250	2.71				22100	2250	3.27	05 - 6160DA - 273	B-110	B-126	B-145
4.55	520	53.0	9810	1000	*	5.49	520	53.0	9810	1000	*	05 - 6120DA - 319	B-108	B-124	B-143
	756	77.1	9810	1000	0.83		627	63.9	9810	1000	1.01	05 - 6125DA - 319	B-108	B-124	B-143
			14700	**1500**	**1.02**				**14700**	**1500**	**1.02**	**05 - 6130DA - 319**	**B-109**	**B-125**	**B-144**
			14700	1500	1.03				14700	1500	1.24	05 - 6130DB - 319	B-109	B-125	B-144
			14700	1500	1.02				14700	1500	1.02	05 - 6135DA - 319	B-109	B-125	B-144
			14700	1500	1.24				14700	1500	1.50	05 - 6135DB - 319	B-109	B-125	B-144
			16000	1630	1.62				16000	1630	1.95	05 - 6140DB - 319	B-109	B-125	B-144
			16000	1630	1.81				16000	1630	2.19	05 - 6145DB - 319	B-109	B-125	B-144
			22100	2250	2.32				22100	2250	2.80	05 - 6160DA - 319	B-110	B-126	B-145
			22100	2250	2.78				22100	2250	3.35	05 - 6165DA - 319	B-110	B-126	B-145

6. "☆" indicates models manufactured with reducer and motor separately mounted on a common baseplate (horizontal shaft direction) or on an adaptor (vertical shaft direction). Consult us for details, including dimensions.
7. Allowable radial load (Pro) is the value at the midpoint of the slow speed shaft.
8. "(K)" indicates models with reduction ratios equal to nominal ratio. Refer to Table A-3 "6000SK Series (Actual Reduction Ratio)" on page A-4 for actual reduction ratio. Indicated reduction ratio is the same as actual reduction ratio for other models.
9. Maintain torque load during operation within "Output torque" in the table for models with "*" in the SF column. They cannot be operated with 100% motor rating.

Selection Tables Gearmotors

n_1: Motor Speed

0.4 kW	Hz	50Hz		60Hz	
	P	4	6	4	6
	n_1 r/min	1450	980	1750	1165

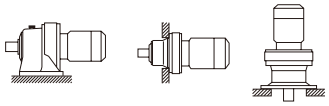

CHHM/CNHM CHFM/CNFM CVVM/CNVM

50Hz						60Hz						Nomenclature	Page of Dimension Sheet		
Output Speed n_2 [r/min]	Output Torque Tout [N·m]	[kgf·m]	Allowable Radial Load Pro [N]	[kgf]	SF	Output Speed n_2 [r/min]	Output Torque Tout [N·m]	[kgf·m]	Allowable Radial Load Pro [N]	[kgf]	SF	Input Capacity Symbol – Frame Size – Reduction Ratio	CNHM CHHM	CNFM CHFM	CNVM CVVM
3.85	520	53.0	9810	1000	*	4.64	520	53.0	9810	1000	*	05 - 6120DA - 377	B-108	B-124	B-143
	630	64.2	9810	1000	*		630	64.2	9810	1000	*	05 - 6125DA - 377	B-108	B-124	B-143
	894	91.1	**14700**	**1500**	**1.02**		741	75.5	**14700**	**1500**	**1.02**	**05 - 6135DA - 377**	**B-109**	**B-125**	**B-144**
			14700	1500	1.05				14700	1500	1.27	05 - 6135DB - 377	B-109	B-125	B-144
			16000	1630	1.02				16000	1630	1.02	05 - 6140DA - 377	B-109	B-125	B-144
			16000	1630	1.37				16000	1630	1.65	05 - 6140DB - 377	B-109	B-125	B-144
			16000	1630	1.53				16000	1630	1.85	05 - 6145DB - 377	B-109	B-125	B-144
			22100	2250	1.96				22100	2250	2.37	05 - 6160DA - 377	B-110	B-126	B-145
			22100	2250	2.35				22100	2250	2.84	05 - 6165DA - 377	B-110	B-126	B-145
			29500	3010	2.83				29500	3010	3.42	05 - 6170DA - 377	B-110	B-126	B-145
3.07	630	64.2	9810	1000	*	3.70	630	64.2	9810	1000	*	05 - 6125DA - 473	B-108	B-124	B-143
	780	79.5	14700	1500	*		780	79.5	14700	1500	*	05 - 6130DA - 473	B-109	B-125	B-144
	1120	114	14700	1500	0.84		929	94.7	14700	1500	1.01	05 - 6135DA - 473	B-109	B-125	B-144
			16000	**1630**	**1.02**				**16000**	**1630**	**1.02**	**05 - 6140DA - 473**	**B-109**	**B-125**	**B-144**
			16000	1630	1.09				16000	1630	1.32	05 - 6140DB - 473	B-109	B-125	B-144
			16000	1630	1.22				16000	1630	1.47	05 - 6145DB - 473	B-109	B-125	B-144
			22100	2250	1.55				22100	2250	1.87	05 - 6160DA - 473	B-110	B-126	B-145
			22100	2250	1.87				22100	2250	2.26	05 - 6165DA - 473	B-110	B-126	B-145
			29500	3010	2.26				29500	3010	2.72	05 - 6170DA - 473	B-110	B-126	B-145
			29500	3010	2.81				29500	3010	3.39	05 - 6175DA - 473	B-110	B-126	B-145
2.59	780	79.5	14700	1500	*	3.13	780	79.5	14700	1500	*	05 - 6130DA - 559	B-109	B-125	B-144
	940	95.8	14700	1500	*		940	95.8	14700	1500	*	05 - 6135DA - 559	B-109	B-125	B-144
	1330	135	**15900**	**1620**	**1.02**		1100	112	**16000**	**1630**	**1.02**	**05 - 6145DA - 559**	**B-109**	**B-125**	**B-144**
			15900	1620	1.03				16000	1630	1.25	05 - 6145DB - 559	B-109	B-125	B-144
			22100	2250	1.31				22100	2250	1.58	05 - 6160DA - 559	B-110	B-126	B-145
			22100	2250	1.58				22100	2250	1.91	05 - 6165DA - 559	B-110	B-126	B-145
			29500	3010	1.91				29500	3010	2.30	05 - 6170DA - 559	B-110	B-126	B-145
			29500	3010	2.38				29500	3010	2.87	05 - 6175DA - 559	B-110	B-126	B-145
2.23	912	93.0	14700	1500	*	2.70	912	93.0	14700	1500	*	05 - 6130DA - 649	B-109	B-125	B-144
	1050	107	14700	1500	*		1050	107	14700	1500	*	05 - 6135DA - 649	B-109	B-125	B-144
	1230	125	16000	1630	*		1230	125	16000	1630	*	05 - 6140DA - 649	B-109	B-125	B-144
	1370	140	16000	1630	*		1230	126	16000	1630	*	05 - 6145DA - 649	B-109	B-125	B-144
	1540	157	22100	2250	1.14		1280	130	22100	2250	1.38	05 - 6160DA - 649	B-110	B-126	B-145
			22100	2250	1.36				22100	2250	1.65	05 - 6165DA - 649	B-110	B-126	B-145
			29500	3010	1.64				29500	3010	1.98	05 - 6170DA - 649	B-110	B-126	B-145
			29500	3010	2.05				29500	3010	2.47	05 - 6175DA - 649	B-110	B-126	B-145
1.98	940	95.8	14700	1500	*	2.39	940	95.8	14700	1500	*	05 - 6135DA - 731	B-109	B-125	B-144
	1230	125	16000	1630	*		1230	125	16000	1630	*	05 - 6140DA - 731	B-109	B-125	B-144
	1370	140	15700	1600	*		1370	140	15700	1600	*	05 - 6145DA - 731	B-109	B-125	B-144
	1730	177	**22100**	**2250**	**1.00**		1440	146	**22100**	**2250**	**1.21**	**05 - 6160DA - 731**	**B-110**	**B-126**	**B-145**
			22100	2250	1.21				22100	2250	1.46	05 - 6165DA - 731	B-110	B-126	B-145
			29500	3010	1.46				29500	3010	1.76	05 - 6170DA - 731	B-110	B-126	B-145
			29500	3010	1.82				29500	3010	2.19	05 - 6175DA - 731	B-110	B-126	B-145
1.72	1230	125	16000	1630	*	2.08	1230	125	16000	1630	*	05 - 6140DA - 841	B-109	B-125	B-144
	1370	140	15800	1610	*		1250	127	16000	1630	*	05 - 6145DA - 841	B-109	B-125	B-144
	1990	203	**22100**	**2250**	**1.05**		1650	168	**22100**	**2250**	**1.27**	**05 - 6165DA - 841**	B-110	B-126	B-145
			29500	3010	1.27				29500	3010	1.53	05 - 6170DA - 841	B-110	B-126	B-145
			29500	3010	1.58				29500	3010	1.91	05 - 6175DA - 841	B-110	B-126	B-145
1.45	1370	140	16000	1630	*	1.74	1370	140	16000	1630	*	05 - 6145DA - 1003	B-109	B-125	B-144
	1760	179	22100	2250	*		1760	179	22100	2250	*	05 - 6160DA - 1003	B-110	B-126	B-145
	2380	242	22100	2250	0.88		1970	201	22100	2250	1.07	05 - 6165DA - 1003	B-110	B-126	B-145
			29500	**3010**	**1.06**				**29500**	**3010**	**1.28**	**05 - 6170DA - 1003**	B-110	B-126	B-145
			29500	3010	1.32				29500	3010	1.60	05 - 6175DA - 1003	B-110	B-126	B-145
1.16	1740	177	22100	2250	*	1.40	1740	177	22100	2250	*	05 - 6160DA - 1247	B-110	B-126	B-145
	2100	214	22100	2250	*		2100	214	22100	2250	*	05 - 6165DA - 1247	B-110	B-126	B-145
	2960	301	**29500**	**3010**	**1.07**		2450	250	**29500**	**3010**	**1.29**	**05 - 6175DA - 1247**	B-110	B-126	B-145

1. Combinations in **bold** are the recommended models for operations for 10 hours/day with uniform load (service factor is about 1.0 for motor rating at 50Hz).
2. Motor slippage may affect n_1 and n_2. Refer to technical data for details.
3. CNHM, CHHM, CNFM, CHFM, CNVM, and CVVM indicate types. Refer to page B-10 for details.
4. Lubrication method is different for each model. Refer to "Lubrication" section in page F-4~F-5 for details.
5. "6" at the end of "input capacity symbol" indicates models with 6P motor. Other models come with 4P motor.

Selection Tables Gearmotors

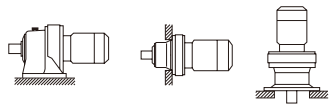

n_1: Motor Speed

0.4 kW	Hz	50Hz		60Hz	
	P	4	6	4	6
	n_1 r/min	1450	980	1750	1165

50Hz						60Hz						Nomenclature				Page of Dimension Sheet		
Output Speed n_2 [r/min]	Output Torque Tout [N·m]	[kgf·m]	Allowable Radial Load Pro [N]	[kgf]	SF	Output Speed n_2 [r/min]	Output Torque Tout [N·m]	[kgf·m]	Allowable Radial Load Pro [N]	[kgf]	SF	Input Capacity Symbol	- Frame Size	- Reduction Ratio		CNHM CHHM	CNFM CHFM	CNVM CVVM
0.980	1760	179	22100	2250	*	1.18	1760	179	22100	2250	*	05 -	6160DA	- 1479		B-110	B-126	B-145
	2050	209	21800	2220	*		2050	209	21800	2220	*	05 -	6165DA	- 1479		B-110	B-126	B-145
	2530	258	29500	3010	*		2530	258	29500	3010	*	05 -	6170DA	- 1479		B-110	B-126	B-145
	3510	357	29500	3010	0.90		2910	296	29500	3010	1.08	05 -	6175DA	- 1479		B-110	B-126	B-145
0.784	2100	214	22100	2250	*	0.946	2100	214	22100	2250	*	05 -	6165DA	- 1849		B-110	B-126	B-145
	2530	258	29500	3010	*		2530	258	29500	3010	*	05 -	6170DA	- 1849		B-110	B-126	B-145
	3150	321	29500	3010	*		3150	321	29500	3010	*	05 -	6175DA	- 1849		B-110	B-126	B-145
	4380	447	41700	4250	0.93		3630	370	41700	4250	1.12	05 -	6180DA	- 1849		B-110	B-126	B-145
0.702	2530	258	29500	3010	*	0.847	2530	258	29500	3010	*	05 -	6170DA	- 2065		B-110	B-126	B-145
	3150	321	29500	3010	*		3150	321	29500	3010	*	05 -	6175DA	- 2065		B-110	B-126	B-145
	4050	413	41700	4250	*		4050	413	41700	4250	*	05 -	6180DA	- 2065		B-110	B-126	B-145
0.572	3150	321	29500	3010	*	0.690	3150	321	29500	3010	*	05 -	6175DA	- 2537		B-110	B-126	B-145
	4050	413	41700	4250	*		4050	413	41700	4250	*	05 -	6180DA	- 2537		B-110	B-126	B-145
	5000	510	41600	4240	*		5000	510	41600	4240	*	05 -	6185DA	- 2537		B-110	B-126	B-145
	6020	613	41200	4200	0.83		4980	508	41600	4240	1.00	05 -	6185DA	- 2537		B-110	B-126	B-145
0.476	4060	414	41700	4250	*	0.575	4060	414	41700	4250	*	05 -	6180DA	- 3045		B-110	B-126	B-145
	5000	510	41700	4250	*		5000	510	41700	4250	*	05 -	6185DA	- 3045		B-110	B-126	B-145
0.417	4050	413	41700	4250	*	0.503	4050	413	41700	4250	*	05 -	6180DA	- 3481		B-110	B-126	B-145
	5000	510	41600	4240	*		5000	510	41600	4240	*	05 -	6185DA	- 3481		B-110	B-126	B-145
0.327	4060	414	41700	4250	*	0.394	4060	414	41700	4250	*	05 -	6180DA	- 4437		B-110	B-126	B-145
	5000	510	41700	4250	*		5000	510	41700	4250	*	05 -	6185DA	- 4437		B-110	B-126	B-145
0.282	4060	414	41700	4250	*	0.341	4060	414	41700	4250	*	05 -	6180DA	- 5133		B-110	B-126	B-145
	5000	510	41700	4250	*		5000	510	41700	4250	*	05 -	6185DA	- 5133		B-110	B-126	B-145
0.235	4060	414	41700	4250	*	0.283	4060	414	41700	4250	*	05 -	6180DA	- 6177		B-110	B-126	B-145
	5000	510	41700	4250	*		5000	510	41700	4250	*	05 -	6185DA	- 6177		B-110	B-126	B-145
0.192	4060	414	41700	4250	*	0.231	4060	414	41700	4250	*	05 -	6180DA	- 7569		B-110	B-126	B-145
	5000	510	41700	4250	*		5000	510	41700	4250	*	05 -	6185DA	- 7569		B-110	B-126	B-145

6. "☆" indicates models manufactured with reducer and motor separately mounted on a common baseplate (horizontal shaft direction) or on an adaptor (vertical shaft direction). Consult us for details, including dimensions.
7. Allowable radial load (Pro) is the value at the midpoint of the slow speed shaft.
8. "(K)" indicates models with reduction ratios equal to nominal ratio. Refer to Table A-3 "6000SK Series (Actual Reduction Ratio)" on page A-4 for actual reduction ratio. Indicated reduction ratio is the same as actual reduction ratio for other models.
9. Maintain torque load during operation within "Output torque" in the table for models with "*" in the SF column. They cannot be operated with 100% motor rating.

Selection Tables Gearmotors

n_1: Motor Speed

0.55 kW	Hz	50Hz		60Hz	
	P	4	6	4	6
	n_1 r/min	1450	980	1750	1165

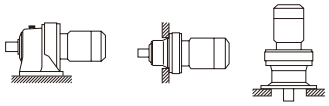

CHHM/CNHM CHFM/CNFM CVVM/CNVM

50Hz						60Hz						Nomenclature				Page of Dimension Sheet		
Output Speed n_2 [r/min]	Output Torque Tout [N·m]	[kgf·m]	Allowable Radial Load Pro [N]	[kgf]	SF	Output Speed n_2 [r/min]	Output Torque Tout [N·m]	[kgf·m]	Allowable Radial Load Pro [N]	[kgf]	SF	Input Capacity Symbol	Frame Size	Reduction Ratio		CNHM CHHM	CNFM CHFM	CNVM CVVM
			1170	119	2.02				1100	112	2.02	08 -	6070SK	- 2.5	(K)	B-98	-	B-133
			1170	119	2.53				1100	112	2.53	08 -	6075SK	- 2.5	(K)	B-98	-	B-133
580	8.60	0.877	1290	131	3.00	700	7.13	0.727	1220	124	3.00	08 -	6080SK	- 2.5	(K)	B-98	-	B-133
			1290	131	3.75				1220	124	3.75	08 -	6085SK	- 2.5	(K)	B-98	-	B-133
			2280	232	4.36				2150	219	4.36	08 -	6090SK	- 2.5	(K)	B-98	-	B-133
			1220	124	1.93				1150	117	1.93	08 -	6070SK	- 3	(K)	B-98	-	B-133
			1220	124	2.41				1150	117	2.41	08 -	6075SK	- 3	(K)	B-98	-	B-133
483	10.3	1.05	1350	138	3.00	583	8.55	0.872	1290	131	3.00	08 -	6080SK	- 3	(K)	B-98	-	B-133
			1350	138	3.75				1290	131	3.75	08 -	6085SK	- 3	(K)	B-98	-	B-133
			2380	243	4.25				2250	229	4.25	08 -	6090SK	- 3	(K)	B-98	-	B-133
			1320	135	1.70				1260	128	1.70	08 -	6070SK	- 4	(K)	B-98	-	B-133
			1320	135	2.12				1260	128	2.12	08 -	6075SK	- 4	(K)	B-98	-	B-133
363	13.8	1.40	1470	150	3.00	438	11.4	1.16	1390	142	3.00	08 -	6080SK	- 4	(K)	B-98	-	B-133
			1470	150	3.75				1390	142	3.75	08 -	6085SK	- 4	(K)	B-98	-	B-133
			2670	272	4.25				2560	261	4.25	08 -	6090SK	- 4	(K)	B-98	-	B-133
			1370	140	1.61				1290	132	1.61	08 -	6070SK	- 5	(K)	B-98	-	B-133
			1370	140	2.02				1290	132	2.02	08 -	6075SK	- 5	(K)	B-98	-	B-133
290	17.2	1.75	1590	162	2.82	350	14.3	1.45	1510	154	2.82	08 -	6080SK	- 5	(K)	B-98	-	B-133
			1590	162	3.31				1510	154	3.31	08 -	6085SK	- 5	(K)	B-98	-	B-133
			2880	294	4.06				2730	278	4.06	08 -	6090SK	- 5	(K)	B-98	-	B-133
			1370	140	1.42				1290	132	1.42	08 -	6070SK	- 6	(K)	B-98	-	B-133
			1370	140	1.78				1290	132	1.78	08 -	6075SK	- 6	(K)	B-98	-	B-133
			1660	169	2.36				1580	161	2.36	08 -	6080SK	- 6	(K)	B-98	-	B-133
			1660	169	2.95				1580	161	2.95	08 -	6085SK	- 6	(K)	B-98	-	B-133
242	20.6	2.10	2950	301	3.47	292	17.1	1.74	2810	286	3.47	08 -	6090SK	- 6	(K)	B-98	-	B-133
			2950	301	4.13				2810	286	4.13	08 -	6095SK	- 6	(K)	B-98	-	B-133
			1910	**195**	**1.08**				**1800**	**183**	**1.08**	**08 -**	**6080**	**- 6**		**B-100**	**B-116**	**B-135**
			1910	195	1.41				1800	183	1.41	08 -	6085	- 6		B-100	B-116	B-135
			2850	291	2.09				2690	274	2.09	08 -	6090	- 6		B-100	B-116	B-135
			2850	291	2.76				2690	274	2.76	08 -	6095	- 6		B-100	B-116	B-135
			1510	154	1.07				1420	145	1.07	08 -	6070SK	- 8	(K)	B-98	-	B-133
			1510	154	1.34				1420	145	1.34	08 -	6075SK	- 8	(K)	B-98	-	B-133
			1750	178	1.99				1670	170	1.99	08 -	6080SK	- 8	(K)	B-98	-	B-133
			1750	178	2.49				1670	170	2.49	08 -	6085SK	- 8	(K)	B-98	-	B-133
			3300	336	2.74				3140	320	2.74	08 -	6090SK	- 8	(K)	B-98	-	B-133
181	27.5	2.81	3300	336	3.22	219	22.8	2.33	3140	320	3.22	08 -	6095SK	- 8	(K)	B-98	-	B-133
			3300	336	3.85				3140	320	3.85	08 -	6100SK	- 8	(K)	B-99	-	B-134
			2070	**211**	**1.08**				**1950**	**198**	**1.08**	**08 -**	**6080**	**- 8**		**B-100**	**B-116**	**B-135**
			2070	211	1.41				1950	198	1.41	08 -	6085	- 8		B-100	B-116	B-135
			3180	324	2.09				2990	305	2.09	08 -	6090	- 8		B-100	B-116	B-135
			3180	324	2.76				2990	305	2.76	08 -	6095	- 8		B-100	B-116	B-135
			1680	**171**	**1.03**				**1590**	**162**	**1.03**	**08 -**	**6075SK**	**- 10**	(K)	**B-98**	**-**	**B-133**
			1840	188	1.60				1770	180	1.60	08 -	6080SK	- 10	(K)	B-98	-	B-133
			1840	188	2.00				1770	180	2.00	08 -	6085SK	- 10	(K)	B-98	-	B-133
145	34.4	3.51	3490	356	2.55	175	28.5	2.91	3330	339	2.55	08 -	6090SK	- 10	(K)	B-98	-	B-133
			3490	356	3.22				3330	339	3.22	08 -	6095SK	- 10	(K)	B-98	-	B-133
			3490	356	3.60				3330	339	3.60	08 -	6100SK	- 10	(K)	B-99	-	B-134
			3490	356	4.00				3330	339	4.00	08 -	6105SK	- 10	(K)	B-99	-	B-134
			2280	**232**	**1.08**				**2150**	**219**	**1.08**	**08 -**	**6080**	**- 11**		**B-100**	**B-116**	**B-135**
132	37.9	3.86	2280	232	1.41	159	31.4	3.20	2150	219	1.41	08 -	6085	- 11		B-100	B-116	B-135
			3340	340	2.09				3340	340	2.09	08 -	6090	- 11		B-100	B-116	B-135
			3340	340	2.76				3340	340	2.76	08 -	6095	- 11		B-100	B-116	B-135
			2450	**249**	**1.08**				**2310**	**235**	**1.08**	**08 -**	**6080**	**- 13**		**B-100**	**B-116**	**B-135**
112	44.7	4.56	2450	249	1.41	135	37.1	3.78	2310	235	1.41	08 -	6085	- 13		B-100	B-116	B-135
			3340	340	2.09				3340	340	2.09	08 -	6090	- 13		B-100	B-116	B-135
			3340	340	2.76				3340	340	2.76	08 -	6095	- 13		B-100	B-116	B-135

1. Combinations in **bold** are the recommended models for operations for 10 hours/day with uniform load (service factor is about 1.0 for motor rating at 50Hz).
2. Motor slippage may affect n_1 and n_2. Refer to technical data for details.
3. CNHM, CHHM, CNFM, CHFM, CNVM, and CVVM indicate types. Refer to page B-10 for details.
4. Lubrication method is different for each model. Refer to "Lubrication" section in page F-4~F-5 for details.
5. "6" at the end of "input capacity symbol" indicates models with 6P motor. Other models come with 4P motor.

Selection Tables Gearmotors

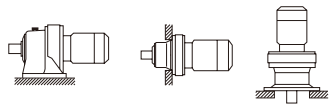

CHHM/CNHM CHFM/CNFM CVVM/CNVM

n_1: Motor Speed

0.55 kW	Hz	50Hz		60Hz	
	P	4	6	4	6
	n_1 r/min	1450	980	1750	1165

50Hz						60Hz						Nomenclature				Page of Dimension Sheet		
Output Speed n_2 [r/min]	Output Torque Tout [N·m]	[kgf·m]	Allowable Radial Load Pro [N]	[kgf]	SF	Output Speed n_2 [r/min]	Output Torque Tout [N·m]	[kgf·m]	Allowable Radial Load Pro [N]	[kgf]	SF	Input Capacity Symbol	– Frame Size	– Reduction Ratio		CNHM CHHM	CNFM CHFM	CNVM CVVM
			2520	**257**	**1.08**				**2380**	**242**	**1.08**	**08 -**	**6080**	**- 15**		**B-100**	**B-116**	**B-135**
96.7	51.6	5.26	2520	257	1.41	117	42.8	4.36	2380	242	1.41	08 -	6085	- 15		B-100	B-116	B-135
			3340	340	2.09				3340	340	2.09	08 -	6090	- 15		B-100	B-116	B-135
			3340	340	2.76				3340	340	2.76	08 -	6095	- 15		B-100	B-116	B-135
			2560	**261**	**1.08**				**2490**	**254**	**1.08**	**08 -**	**6080**	**- 17**		**B-100**	**B-116**	**B-135**
85.3	58.5	5.96	2560	261	1.41	103	48.5	4.94	2490	254	1.41	08 -	6085	- 17		B-100	B-116	B-135
			3340	340	2.09				3340	340	2.09	08 -	6090	- 17		B-100	B-116	B-135
			3340	340	2.76				3340	340	2.76	08 -	6095	- 17		B-100	B-116	B-135
			2560	**261**	**1.00**				**2430**	**247**	**1.00**	**08 -**	**6085**	**- 21**		**B-100**	**B-116**	**B-135**
69.0	72.3	7.37	3340	340	1.38	83.3	59.9	6.10	3340	340	1.38	08 -	6090	- 21		B-100	B-116	B-135
			3340	340	2.75				3340	340	2.76	08 -	6095	- 21		B-100	B-116	B-135
			2510	256	0.86				2490	254	0.86	08 -	6085	- 25		B-100	B-116	B-135
58.0	86.0	8.77	**3340**	**340**	**1.22**	70.0	71.3	7.27	**3340**	**340**	**1.22**	**08 -**	**6090**	**- 25**		**B-100**	**B-116**	**B-135**
			3340	340	1.57				3340	340	1.57	08 -	6095	- 25		B-100	B-116	B-135
			5400	550	2.31				5400	550	2.31	08 -	6100	- 25		B-101	B-117	B-136
			2300	235	0.85				2480	253	0.85	08 -	6085	- 29		B-100	B-116	B-135
			3340	**340**	**1.14**				**3340**	**340**	**1.14**	**08 -**	**6090**	**- 29**		**B-100**	**B-116**	**B-135**
50.0	99.8	10.2	3340	340	1.43	60.3	82.7	8.43	3340	340	1.43	08 -	6095	- 29		B-100	B-116	B-135
			5400	550	2.20				5400	550	2.20	08 -	6100	- 29		B-101	B-117	B-136
			5400	550	2.89				5400	550	2.89	08 -	6105	- 29		B-101	B-117	B-136
			3340	**340**	**1.11**				**3340**	**340**	**1.11**	**08 -**	**6090**	**- 35**		**B-100**	**B-116**	**B-135**
			3340	340	1.38				3340	340	1.38	08 -	6095	- 35		B-100	B-116	B-135
41.4	120	12.3	5400	550	1.77	50.0	99.8	10.2	5400	550	1.77	08 -	6100	- 35		B-101	B-117	B-136
			5400	550	2.18				5400	550	2.18	08 -	6105	- 35		B-101	B-117	B-136
			7510	765	2.73				7530	767	2.73	08 -	6110	- 35		B-101	B-117	B-136
			3320	**338**	**1.10**				**3340**	**340**	**1.10**	**08 -**	**6095**	**- 43**		**B-100**	**B-116**	**B-135**
			5400	550	1.42				5400	550	1.42	08 -	6100	- 43		B-101	B-117	B-136
33.7	148	15.1	5400	550	1.96	40.7	123	12.5	5400	550	1.96	08 -	6105	- 43		B-101	B-117	B-136
			7610	776	2.36				7610	776	2.36	08 -	6110	- 43		B-101	B-117	B-136
			7610	776	2.76				7610	776	2.76	08 -	6115	- 43		B-101	B-117	B-136
			5400	**550**	**1.02**				**5400**	**550**	**1.02**	**08 -**	**6100**	**- 51**		**B-101**	**B-117**	**B-136**
			5400	550	1.41				5400	550	1.41	08 -	6105	- 51		B-101	B-117	B-136
28.4	176	17.9	7610	776	1.72	34.3	145	14.8	7610	776	1.72	08 -	6110	- 51		B-101	B-117	B-136
			7610	776	2.02				7610	776	2.02	08 -	6115	- 51		B-101	B-117	B-136
			9810	1000	2.96				9810	1000	3.13	08 -	6120	- 51		B-101	B-117	B-136
			5400	**550**	**1.24**				**5400**	**550**	**1.29**	**08 -**	**6105**	**- 59**		**B-101**	**B-117**	**B-136**
			7610	776	1.56				7610	776	1.56	08 -	6110	- 59		B-101	B-117	B-136
24.6	203	20.7	7610	776	1.84	29.7	168	17.1	7610	776	1.84	08 -	6115	- 59		B-101	B-117	B-136
			9810	1000	2.36				9810	1000	2.36	08 -	6120	- 59		B-101	B-117	B-136
			9810	1000	2.95				9810	1000	2.95	08 -	6125	- 59		B-101	B-117	B-136
			5380	549	0.92				5400	550	1.02	08 -	6105	- 71		B-101	B-117	B-136
			7610	**776**	**1.22**				**7610**	**776**	**1.22**	**08 -**	**6110**	**- 71**		**B-101**	**B-117**	**B-136**
20.4	244	24.9	7610	776	1.38	24.6	202	20.6	7610	776	1.38	08 -	6115	- 71		B-101	B-117	B-136
			9810	1000	1.74				9810	1000	1.74	08 -	6120	- 71		B-101	B-117	B-136
			9810	1000	2.07				9810	1000	2.18	08 -	6125	- 71		B-101	B-117	B-136
			4800	489	0.91				5400	550	1.03	08 -	6105	- 87		B-101	B-117	B-136
			7610	**776**	**1.20**				**7610**	**776**	**1.20**	**08 -**	**6110**	**- 87**		**B-101**	**B-117**	**B-136**
			7610	776	1.38				7610	776	1.38	08 -	6115	- 87		B-101	B-117	B-136
16.7	299	30.5	9810	1000	1.72	20.1	248	25.3	9810	1000	1.72	08 -	6120	- 87		B-101	B-117	B-136
			9810	1000	1.87				9810	1000	2.05	08 -	6125	- 87		B-101	B-117	B-136
			14700	1500	2.58				14200	1450	2.58	08 -	6130	- 87		B-102	B-118	B-137
			14700	1500	3.00				14200	1450	3.47	08 -	6135	- 87		B-102	B-118	B-137

6. "☆" indicates models manufactured with reducer and motor separately mounted on a common baseplate (horizontal shaft direction) or on an adaptor (vertical shaft direction). Consult us for details, including dimensions.
7. Allowable radial load (Pro) is the value at the midpoint of the slow speed shaft.
8. "(K)" indicates models with reduction ratios equal to nominal ratio. Refer to Table A-3 "6000SK Series (Actual Reduction Ratio)" on page A-4 for actual reduction ratio. Indicated reduction ratio is the same as actual reduction ratio for other models.
9. Maintain torque load during operation within "Output torque" in the table for models with "*" in the SF column. They cannot be operated with 100% motor rating.

Selection Tables Gearmotors

n_1: Motor Speed

0.55 kW	Hz	50Hz		60Hz	
	P	4	6	4	6
	n_1 r/min	1450	980	1750	1165

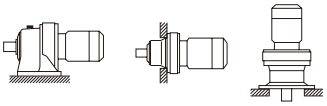

CHHM/CNHM CHFM/CNFM CVVM/CNVM

50Hz						60Hz						Nomenclature	Page of Dimension Sheet		
Output Speed n_2 [r/min]	Output Torque Tout [N·m]	[kgf·m]	Allowable Radial Load Pro [N]	[kgf]	SF	Output Speed n_2 [r/min]	Output Torque Tout [N·m]	[kgf·m]	Allowable Radial Load Pro [N]	[kgf]	SF	Input Capacity Symbol - Frame Size - Reduction Ratio	CNHM CHHM	CNFM CHFM	CNVM CVVM
13.9	339	34.6	9810	1000	1.55	16.8	281	28.6	9810	1000	1.87	08 - 6120DB - 104	B-108	B-124	B-143
			9810	1000	1.86				9810	1000	2.24	08 - 6125DB - 104	B-108	B-124	B-143
			14700	1500	2.30				14700	1500	2.77	08 - 6130DB - 104	B-109	B-125	B-144
			14700	1500	2.77				14700	1500	2.77	08 - 6135DB - 104	B-109	B-125	B-144
			14700	1500	2.77				14700	1500	3.35	08 - 6135DC - 104	B-109	B-125	B-144
			16000	1630	2.91				16000	1630	2.77	08 - 6140DB - 104	B-109	B-125	B-144
12.0	394	40.2	9810	1000	1.33	14.5	327	33.3	9810	1000	1.61	08 - 6120DB - 121	B-108	B-124	B-143
			9810	1000	1.58				9810	1000	1.90	08 - 6125DB - 121	B-108	B-124	B-143
			14700	1500	1.98				14700	1500	2.39	08 - 6130DB - 121	B-109	B-125	B-144
			14700	1500	2.38				14700	1500	2.77	08 - 6135DB - 121	B-109	B-125	B-144
			16000	1630	2.77				16000	1630	2.77	08 - 6140DB - 121	B-109	B-125	B-144
10.1	466	47.5	9810	1000	1.13	12.2	386	39.4	9810	1000	1.36	08 - 6120DB - 143	B-108	B-124	B-143
			9810	1000	1.35				9810	1000	1.63	08 - 6125DB - 143	B-108	B-124	B-143
			14700	1500	1.67				14700	1500	2.02	08 - 6130DB - 143	B-109	B-125	B-144
			14700	1500	2.02				14700	1500	2.43	08 - 6135DB - 143	B-109	B-125	B-144
			16000	1630	2.63				16000	1630	2.77	08 - 6140DB - 143	B-109	B-125	B-144
			16000	1630	2.63				16000	1630	3.17	08 - 6140DC - 143	B-109	B-125	B-144
			16000	1630	2.77				16000	1630	2.77	08 - 6145DB - 143	B-109	B-125	B-144
			16000	1630	2.94				16000	1630	3.55	08 - 6145DC - 143	B-109	B-125	B-144
8.79	538	54.8	9810	1000	1.17	10.6	446	45.4	9810	1000	1.41	08 - 6125DB - 165	B-108	B-124	B-143
			14700	1500	1.45				14700	1500	1.75	08 - 6130DB - 165	B-109	B-125	B-144
			14700	1500	1.75				14700	1500	2.11	08 - 6135DB - 165	B-109	B-125	B-144
			16000	1630	2.28				16000	1630	2.75	08 - 6140DB - 165	B-109	B-125	B-144
			16000	1630	2.52				16000	1630	2.77	08 - 6145DB - 165	B-109	B-125	B-144
			16000	1630	2.52				16000	1630	3.05	08 - 6145DC - 165	B-109	B-125	B-144
			22100	2250	2.77				22100	2250	2.77	08 - 6160DA - 165	B-110	B-126	B-145
7.44	525	53.5	9810	1000	*	8.97	525	53.5	9810	1000	*	08 - 6120DB - 195	B-108	B-124	B-143
	636	64.8	9810	1000	0.98		527	53.7	9810	1000	1.20	08 - 6125DB - 195	B-108	B-124	B-143
			14700	1500	1.23				14700	1500	1.48	08 - 6130DB - 195	B-109	B-125	B-144
			14700	1500	1.48				14700	1500	1.78	08 - 6135DB - 195	B-109	B-125	B-144
			16000	1630	1.93				16000	1630	2.33	08 - 6140DB - 195	B-109	B-125	B-144
			16000	1630	2.14				16000	1630	2.58	08 - 6145DB - 195	B-109	B-125	B-144
			22100	2250	2.76				22100	2250	2.77	08 - 6160DA - 195	B-110	B-126	B-145
			22100	2250	2.76				22100	2250	3.33	08 - 6160DB - 195	B-110	B-126	B-145
			22100	2250	2.77				22100	2250	2.77	08 - 6165DA - 195	B-110	B-126	B-145
6.28	522	53.2	9810	1000	*	7.58	522	53.2	9810	1000	*	08 - 6120DB - 231	B-108	B-124	B-143
	753	76.8	9810	1000	0.84		624	63.6	9810	1000	1.01	08 - 6125DB - 231	B-108	B-124	B-143
			14700	**1500**	**1.04**				**14700**	**1500**	**1.25**	**08 - 6130DB - 231**	**B-109**	**B-125**	**B-144**
			14700	1500	1.25				14700	1500	1.51	08 - 6135DB - 231	B-109	B-125	B-144
			16000	1630	1.63				16000	1630	1.96	08 - 6140DB - 231	B-109	B-125	B-144
			16000	1630	1.78				16000	1630	2.14	08 - 6145DB - 231	B-109	B-125	B-144
			22100	2250	2.33				22100	2250	2.77	08 - 6160DA - 231	B-110	B-126	B-145
			22100	2250	2.77				22100	2250	2.77	08 - 6165DA - 231	B-110	B-126	B-145
			22100	2250	2.79				22100	2250	3.37	08 - 6165DB - 231	B-110	B-126	B-145
			29500	3010	2.77				29500	3010	2.77	08 - 6170DA - 231	B-110	B-126	B-145

1. Combinations in **bold** are the recommended models for operations for 10 hours/day with uniform load (service factor is about 1.0 for motor rating at 50Hz).
2. Motor slippage may affect n_1 and n_2. Refer to technical data for details.
3. CNHM, CHHM, CNFM, CHFM, CNVM, and CVVM indicate types. Refer to page B-10 for details.
4. Lubrication method is different for each model. Refer to "Lubrication" section in page F-4~F-5 for details.
5. "6" at the end of "input capacity symbol" indicates models with 6P motor. Other models come with 4P motor.

Selection Tables Gearmotors

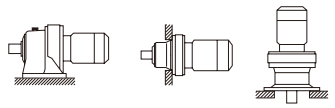

0.55 kW

n_1: Motor Speed

Hz	50Hz		60Hz	
P	4	6	4	6
n_1 r/min	1450	980	1750	1165

50Hz						60Hz						Nomenclature	Page of Dimension Sheet		
Output Speed n_2 [r/min]	Output Torque Tout [N·m]	[kgf·m]	Allowable Radial Load Pro [N]	[kgf]	SF	Output Speed n_2 [r/min]	Output Torque Tout [N·m]	[kgf·m]	Allowable Radial Load Pro [N]	[kgf]	SF	Input Capacity Symbol – Frame Size – Reduction Ratio	CNHM CHHM	CNFM CHFM	CNVM CVVM
			14700	**1500**	**1.06**				**14700**	**1500**	**1.27**	**08 - 6135DB - 273**	**B-109**	**B-125**	**B-144**
			16000	1630	1.38				16000	1630	1.66	08 - 6140DB - 273	B-109	B-125	B-144
			16000	1630	1.50				16000	1630	1.81	08 - 6145DB - 273	B-109	B-125	B-144
5.31	890	90.7	22100	2250	1.97	6.41	737	75.2	22100	2250	2.38	08 - 6160DA - 273	B-110	B-126	B-145
			22100	2250	2.36				22100	2250	2.77	08 - 6165DA - 273	B-110	B-126	B-145
			29500	3010	2.77				29500	3010	2.77	08 - 6170DA - 273	B-110	B-126	B-145
			29500	3010	2.84				29500	3010	3.43	08 - 6170DB - 273	B-110	B-126	B-145
			29500	3010	2.77				29500	3010	2.77	08 - 6175DA - 273	B-110	B-126	B-145
	630	64.2	9810	1000	*		630	64.2	9810	1000	*	08 - 6125DB - 319	B-108	B-124	B-143
	780	79.5	14700	1500	*		780	79.5	14700	1500	*	08 - 6130DB - 319	B-109	B-125	B-144
			14700	1500	0.90				14700	1500	1.09	08 - 6135DB - 319	B-109	B-125	B-144
			16000	1630	1.18				16000	1630	1.42	08 - 6140DB - 319	B-109	B-125	B-144
			16000	1630	1.32				16000	1630	1.59	08 - 6145DB - 319	B-109	B-125	B-144
4.55	1040	106	22100	2250	1.69	5.49	862	87.8	22100	2250	2.04	08 - 6160DA - 319	B-110	B-126	B-145
			22100	2250	2.02				22100	2250	2.44	08 - 6165DA - 319	B-110	B-126	B-145
			29500	3010	2.43				29500	3010	2.77	08 - 6170DA - 319	B-110	B-126	B-145
			29500	3010	2.43				29500	3010	2.94	08 - 6170DB - 319	B-110	B-126	B-145
			29500	3010	2.77				29500	3010	2.77	08 - 6175DA - 319	B-110	B-126	B-145
	780	79.5	14700	1500	*		780	79.5	14700	1500	*	08 - 6130DB - 377	B-109	B-125	B-144
	940	95.8	14700	1500	*		940	95.8	14700	1500	*	08 - 6135DB - 377	B-109	B-125	B-144
			16000	**1630**	**1.00**				**16000**	**1630**	**1.20**	**08 - 6140DB - 377**	**B-109**	**B-125**	**B-144**
			16000	1630	1.11				16000	1630	1.35	08 - 6145DB - 377	B-109	B-125	B-144
3.85			22100	2250	1.43	4.64			22100	2250	1.72	08 - 6160DA - 377	B-110	B-126	B-145
	1230	125	22100	2250	1.71		1020	104	22100	2250	2.06	08 - 6165DA - 377	B-110	B-126	B-145
			29500	3010	2.06				29500	3010	2.48	08 - 6170DA - 377	B-110	B-126	B-145
			29500	3010	2.56				29500	3010	2.77	08 - 6175DA - 377	B-110	B-126	B-145
			29500	3010	2.56				29500	3010	3.09	08 - 6175DB - 377	B-110	B-126	B-145
	940	95.8	14700	1500	*		940	95.8	14700	1500	*	08 - 6135DB - 473	B-109	B-125	B-144
	1230	125	16000	1630	*		1230	125	16000	1630	*	08 - 6140DB - 473	B-109	B-125	B-144
			14800	1510	0.89				16000	1630	1.07	08 - 6145DB - 473	B-109	B-125	B-144
3.07			22100	2250	1.13	3.70			22100	2250	1.36	08 - 6160DA - 473	B-110	B-126	B-145
	1540	157	22100	2250	1.36		1280	130	22100	2250	1.64	08 - 6165DA - 473	B-110	B-126	B-145
			29500	3010	1.64				29500	3010	1.98	08 - 6170DA - 473	B-110	B-126	B-145
			29500	3010	2.04				29500	3010	2.47	08 - 6175DA - 473	B-110	B-126	B-145
	1230	125	16000	1630	*		1230	125	16000	1630	*	08 - 6140DB - 559	B-109	B-125	B-144
	1370	140	15700	1600	*		1370	140	15700	1600	*	08 - 6145DB - 559	B-109	B-125	B-144
2.59			22100	2250	1.15	3.13			22100	2250	1.39	08 - 6165DA - 559	B-110	B-126	B-145
	1820	186	29500	3010	1.39		1510	154	29500	3010	1.68	08 - 6170DA - 559	B-110	B-126	B-145
			29500	3010	1.73				29500	3010	2.09	08 - 6175DA - 559	B-110	B-126	B-145
	1370	140	16000	1630	*		1370	140	16000	1630	*	08 - 6145DB - 649	B-109	B-125	B-144
	1760	179	22100	2250	*		1760	179	22100	2250	*	08 - 6160DA - 649	B-110	B-126	B-145
2.23			22100	2250	0.98	2.70			22100	2250	1.20	08 - 6165DA - 649	B-110	B-126	B-145
	2120	216	29500	3010	1.20		1750	179	29500	3010	1.44	08 - 6170DA - 649	B-110	B-126	B-145
			29500	3010	1.49				29500	3010	1.80	08 - 6175DA - 649	B-110	B-126	B-145
	1740	177	22100	2250	*		1740	177	22100	2250	*	08 - 6160DA - 731	B-110	B-126	B-145
1.98			22100	2250	0.88	2.39			22100	2250	1.06	08 - 6165DA - 731	B-110	B-126	B-145
	2380	243	**29500**	**3010**	**1.06**		1970	201	**29500**	**3010**	**1.28**	**08 - 6170DA - 731**	**B-110**	**B-126**	**B-145**
			29500	3010	1.32				29500	3010	1.60	08 - 6175DA - 731	B-110	B-126	B-145

6. "☆" indicates models manufactured with reducer and motor separately mounted on a common baseplate (horizontal shaft direction) or on an adaptor (vertical shaft direction). Consult us for details, including dimensions.
7. Allowable radial load (Pro) is the value at the midpoint of the slow speed shaft.
8. "(K)" indicates models with reduction ratios equal to nominal ratio. Refer to Table A-3 "6000SK Series (Actual Reduction Ratio)" on page A-4 for actual reduction ratio. Indicated reduction ratio is the same as actual reduction ratio for other models.
9. Maintain torque load during operation within "Output torque" in the table for models with "*" in the SF column. They cannot be operated with 100% motor rating.

Selection Tables Gearmotors

n_1: Motor Speed

0.55 kW	Hz	50Hz		60Hz	
	P	4	6	4	6
	n_1 r/min	1450	980	1750	1165

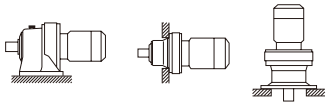

50Hz						60Hz						Nomenclature	Page of Dimension Sheet		
Output Speed n_2 [r/min]	Output Torque Tout [N·m]	[kgf·m]	Allowable Radial Load Pro [N]	[kgf]	SF	Output Speed n_2 [r/min]	Output Torque Tout [N·m]	[kgf·m]	Allowable Radial Load Pro [N]	[kgf]	SF	Input Capacity Symbol - Frame Size - Reduction Ratio	CNHM CHHM	CNFM CHFM	CNVM CVVM
1.72	1760	179	22100	2250	*	2.08	1760	179	22100	2250	*	08 - 6160DA - 841	B-110	B-126	B-145
	2100	214	22100	2250	*		2100	214	22100	2250	*	08 - 6165DA - 841	B-110	B-126	B-145
	2740	279	29500	3010	1.15		2270	232	29500	3010	1.39	08 - 6175DA - 841	B-110	B-126	B-145
1.45	2100	214	22100	2250	*	1.74	2100	214	22100	2250	*	08 - 6165DA - 1003	B-110	B-126	B-145
	2530	258	29500	3010	*		2530	258	29500	3010	*	08 - 6170DA - 1003	B-110	B-126	B-145
	3270	333	29500	3010	0.96		2710	276	29500	3010	1.16	08 - 6175DA - 1003	B-110	B-126	B-145
1.16	2530	258	29500	3010	*	1.40	2530	258	29500	3010	*	08 - 6170DA - 1247	B-110	B-126	B-145
	3150	321	29500	3010	*		3150	321	29500	3010	*	08 - 6175DA - 1247	B-110	B-126	B-145
0.980	3150	321	29500	3010	*	1.18	3150	321	29500	3010	*	08 - 6175DA - 1479	B-110	B-126	B-145
0.784	4060	414	41700	4250	*	0.946	4060	414	41700	4250	*	08 - 6180DA - 1849	B-110	B-126	B-145

n_1: Motor Speed

0.75 kW	Hz	50Hz		60Hz	
	P	4	6	4	6
	n_1 r/min	1450	980	1750	1165

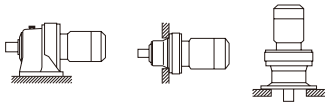

50Hz						60Hz						Nomenclature	Page of Dimension Sheet		
Output Speed n_2 [r/min]	Output Torque Tout [N·m]	[kgf·m]	Allowable Radial Load Pro [N]	[kgf]	SF	Output Speed n_2 [r/min]	Output Torque Tout [N·m]	[kgf·m]	Allowable Radial Load Pro [N]	[kgf]	SF	Input Capacity Symbol - Frame Size - Reduction Ratio	CNHM CHHM	CNFM CHFM	CNVM CVVM
580	11.7	1.20	1130	115	1.48	700	9.72	0.991	1080	110	1.48	1 - 6070SK - 2.5 (K)	B-98	-	B-133
			1130	115	1.85				1080	110	1.85	1 - 6075SK - 2.5 (K)	B-98	-	B-133
			1260	128	2.20				1190	121	2.20	1 - 6080SK - 2.5 (K)	B-98	-	B-133
			1260	128	2.75				1190	121	2.75	1 - 6085SK - 2.5 (K)	B-98	-	B-133
			2250	229	3.20				2130	217	3.20	1 - 6090SK - 2.5 (K)	B-98	-	B-133
			2250	229	3.61				2130	217	3.61	1 - 6095SK - 2.5 (K)	B-98	-	B-133
483	14.1	1.44	1180	120	1.41	583	11.7	1.19	1120	114	1.41	1 - 6070SK - 3 (K)	B-98	-	B-133
			1180	120	1.77				1120	114	1.77	1 - 6075SK - 3 (K)	B-98	-	B-133
			1310	134	2.20				1250	127	2.20	1 - 6080SK - 3 (K)	B-98	-	B-133
			1310	134	2.75				1250	127	2.75	1 - 6085SK - 3 (K)	B-98	-	B-133
			2340	239	3.12				2220	226	3.12	1 - 6090SK - 3 (K)	B-98	-	B-133
			2340	239	3.51				2220	226	3.51	1 - 6095SK - 3 (K)	B-98	-	B-133
363	18.8	1.91	**1270**	**129**	**1.25**	438	15.6	1.59	**1220**	**124**	**1.25**	**1 - 6070SK - 4 (K)**	**B-98**	**-**	**B-133**
			1270	129	1.56				1220	124	1.56	1 - 6075SK - 4 (K)	B-98	-	B-133
			1420	145	2.20				1350	138	2.20	1 - 6080SK - 4 (K)	B-98	-	B-133
			1420	145	2.75				1350	138	2.75	1 - 6085SK - 4 (K)	B-98	-	B-133
			2660	271	3.12				2520	257	3.12	1 - 6090SK - 4 (K)	B-98	-	B-133
			2660	271	3.51				2520	257	3.51	1 - 6095SK - 4 (K)	B-98	-	B-133
290	23.5	2.39	**1370**	**140**	**1.18**	350	19.4	1.98	**1290**	**132**	**1.18**	**1 - 6070SK - 5 (K)**	**B-98**	**-**	**B-133**
			1370	140	1.48				1290	132	1.48	1 - 6075SK - 5 (K)	B-98	-	B-133
			1530	156	2.07				1460	149	2.07	1 - 6080SK - 5 (K)	B-98	-	B-133
			1530	156	2.47				1460	149	2.43	1 - 6085SK - 5 (K)	B-98	-	B-133
			2820	287	2.98				2680	273	2.98	1 - 6090SK - 5 (K)	B-98	-	B-133
			2820	287	3.51				2680	273	3.51	1 - 6095SK - 5 (K)	B-98	-	B-133

1. Combinations in **bold** are the recommended models for operations for 10 hours/day with uniform load (service factor is about 1.0 for motor rating at 50Hz).
2. Motor slippage may affect n_1 and n_2. Refer to technical data for details.
3. CNHM, CHHM, CNFM, CHFM, CNVM, and CVVM indicate types. Refer to page B-10 for details.
4. Lubrication method is different for each model. Refer to "Lubrication" section in page F-4~F-5 for details.
5. "6" at the end of "input capacity symbol" indicates models with 6P motor. Other models come with 4P motor.

Selection Tables Gearmotors

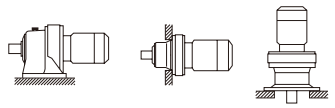

n_1: Motor Speed

0.75 kW	Hz	50Hz		60Hz	
	P	4	6	4	6
	n_1 r/min	1450	980	1750	1165

50Hz						60Hz						Nomenclature						Page of Dimension Sheet		
Output Speed n_2 [r/min]	Output Torque Tout [N·m]	[kgf·m]	Allowable Radial Load Pro [N]	[kgf]	SF	Output Speed n_2 [r/min]	Output Torque Tout [N·m]	[kgf·m]	Allowable Radial Load Pro [N]	[kgf]	SF	Input Capacity Symbol	–	Frame Size	–	Reduction Ratio		CNHM CHHM	CNFM CHFM	CNVM CVVM
			1370	**140**	**1.04**				**1290**	**132**	**1.04**	**1**	**-**	**6070SK**	**-**	**6**	**(K)**	**B-98**	**-**	**B-133**
			1370	140	1.30				1290	132	1.30	1	-	6075SK	-	6	(K)	B-98	-	B-133
			1580	161	1.73				1520	155	1.73	1	-	6080SK	-	6	(K)	B-98	-	B-133
			1580	161	2.16				1520	155	2.16	1	-	6085SK	-	6	(K)	B-98	-	B-133
242	28.2	2.87	2880	294	2.55	292	23.3	2.38	2750	280	2.55	1	-	6090SK	-	6	(K)	B-98	-	B-133
			2880	294	3.03				2750	280	3.03	1	-	6095SK	-	6	(K)	B-98	-	B-133
			2880	294	3.56				2750	280	3.56	1	-	6100SK	-	6	(K)	B-99	-	B-134
			1900	**193**	**1.04**				**1790**	**182**	**1.04**	**1**	**-**	**6085**	**-**	**6**		**B-100**	**B-116**	**B-135**
			2840	290	1.53				2670	273	1.53	1	-	6090	-	6		B-100	B-116	B-135
			2840	290	2.03				2670	273	2.03	1	-	6095	-	6		B-100	B-116	B-135
			1510	154	0.98				1420	145	0.98	1	-	6075SK	-	8	(K)	B-98	-	B-133
			1660	169	1.46				1590	162	1.46	1	-	6080SK	-	8	(K)	B-98	-	B-133
			1660	169	1.83				1590	162	1.83	1	-	6085SK	-	8	(K)	B-98	-	B-133
			3210	327	2.01				3060	312	2.01	1	-	6090SK	-	8	(K)	B-98	-	B-133
181	37.5	3.83	3210	327	2.36	219	31.1	3.17	3060	312	2.36	1	-	6095SK	-	8	(K)	B-98	-	B-133
			3210	327	2.82				3060	312	2.82	1	-	6100SK	-	8	(K)	B-99	-	B-134
			3210	327	3.32				3060	312	3.32	1	-	6105SK	-	8	(K)	B-99	-	B-134
			2050	**209**	**1.04**				**1930**	**197**	**1.04**	**1**	**-**	**6085**	**-**	**8**		**B-100**	**B-116**	**B-135**
			3160	322	1.53				2980	304	1.53	1	-	6090	-	8		B-100	B-116	B-135
			3160	322	2.03				2980	304	2.03	1	-	6095	-	8		B-100	B-116	B-135
			1740	**177**	**1.17**				**1680**	**171**	**1.17**	**1**	**-**	**6080SK**	**-**	**10**	**(K)**	**B-98**	**-**	**B-133**
			1740	177	1.47				1680	171	1.47	1	-	6085SK	-	10	(K)	B-98	-	B-133
145	46.9	4.78	3380	345	1.87	175	38.9	3.96	3240	330	1.87	1	-	6090SK	-	10	(K)	B-98	-	B-133
			3380	345	2.36				3240	330	2.36	1	-	6095SK	-	10	(K)	B-98	-	B-133
			3380	345	2.64				3240	330	2.64	1	-	6100SK	-	10	(K)	B-99	-	B-134
			3380	345	2.93				3240	330	2.93	1	-	6105SK	-	10	(K)	B-99	-	B-134
			2250	**230**	**1.04**				**2130**	**217**	**1.04**	**1**	**-**	**6085**	**-**	**11**		**B-100**	**B-116**	**B-135**
132	51.6	5.26	3340	340	1.53	159	42.8	4.36	3340	340	1.53	1	-	6090	-	11		B-100	B-116	B-135
			3340	340	2.03				3340	340	2.03	1	-	6095	-	11		B-100	B-116	B-135
			2410	**246**	**1.04**				**2280**	**233**	**1.04**	**1**	**-**	**6085**	**-**	**13**		**B-100**	**B-116**	**B-135**
112	61.0	6.22	3340	340	1.53	135	50.5	5.15	3340	340	1.53	1	-	6090	-	13		B-100	B-116	B-135
			3340	340	2.03				3340	340	2.03	1	-	6095	-	13		B-100	B-116	B-135
			2490	**253**	**1.04**				**2350**	**240**	**1.04**	**1**	**-**	**6085**	**-**	**15**		**B-100**	**B-116**	**B-135**
96.7	70.4	7.18	3340	340	1.53	117	58.3	5.95	3340	340	1.53	1	-	6090	-	15		B-100	B-116	B-135
			3340	340	2.03				3340	340	2.03	1	-	6095	-	15		B-100	B-116	B-135
			2560	**261**	**1.04**				**2460**	**251**	**1.04**	**1**	**-**	**6085**	**-**	**17**		**B-100**	**B-116**	**B-135**
85.3	79.8	8.13	3340	340	1.53	103	66.1	6.74	3340	340	1.53	1	-	6090	-	17		B-100	B-116	B-135
			3340	340	2.03				3340	340	2.03	1	-	6095	-	17		B-100	B-116	B-135
			5400	550	2.65				5400	550	2.65	1	-	6100	-	17		B-101	B-117	B-136
			3340	**340**	**1.01**				**3340**	**340**	**1.01**	**1**	**-**	**6090**	**-**	**21**		**B-100**	**B-116**	**B-135**
69.0	98.5	10.0	3340	340	2.01	83.3	81.7	8.32	3340	340	2.03	1	-	6095	-	21		B-100	B-116	B-135
			5400	550	2.53				5400	550	2.57	1	-	6100	-	21		B-101	B-117	B-136
			3340	**340**	**1.15**				**3340**	**340**	**1.15**	**1**	**-**	**6095**	**-**	**25**		**B-100**	**B-116**	**B-135**
			5400	550	1.69				5400	550	1.69	1	-	6100	-	25		B-101	B-117	B-136
58.0	117	12.0	5400	550	2.23	70.0	97.2	9.91	5400	550	2.23	1	-	6105	-	25		B-101	B-117	B-136
			7240	738	2.55				6810	694	2.55	1	-	6110	-	25		B-101	B-117	B-136
			7240	738	2.96				6810	694	2.96	1	-	6115	-	25		B-101	B-117	B-136
			3320	**338**	**1.05**				**3340**	**340**	**1.05**	**1**	**-**	**6095**	**-**	**29**		**B-100**	**B-116**	**B-135**
			5400	550	1.61				5400	550	1.61	1	-	6100	-	29		B-101	B-117	B-136
50.0	136	13.9	5400	550	2.12	60.3	113	11.5	5400	550	2.12	1	-	6105	-	29		B-101	B-117	B-136
			7410	756	2.53				7000	714	2.53	1	-	6110	-	29		B-101	B-117	B-136
			7410	756	2.96				7000	714	2.96	1	-	6115	-	29		B-101	B-117	B-136

6. "☆" indicates models manufactured with reducer and motor separately mounted on a common baseplate (horizontal shaft direction) or on an adaptor (vertical shaft direction). Consult us for details, including dimensions.
7. Allowable radial load (Pro) is the value at the midpoint of the slow speed shaft.
8. "(K)" indicates models with reduction ratios equal to nominal ratio. Refer to Table A-3 "6000SK Series (Actual Reduction Ratio)" on page A-4 for actual reduction ratio. Indicated reduction ratio is the same as actual reduction ratio for other models.
9. Maintain torque load during operation within "Output torque" in the table for models with "*" in the SF column. They cannot be operated with 100% motor rating.

Selection Tables Gearmotors

n_1: Motor Speed

0.75 kW	Hz	50Hz		60Hz	
	P	4	6	4	6
	n_1 r/min	1450	980	1750	1165

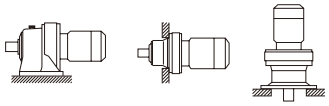

CHHM/CNHM CHFM/CNFM CVVM/CNVM

50Hz						60Hz						Nomenclature				Page of Dimension Sheet		
Output Speed n_2 [r/min]	Output Torque Tout [N·m]	[kgf·m]	Allowable Radial Load Pro [N]	[kgf]	SF	Output Speed n_2 [r/min]	Output Torque Tout [N·m]	[kgf·m]	Allowable Radial Load Pro [N]	[kgf]	SF	Input Capacity Symbol	-	Frame Size	- Reduction Ratio	CNHM CHHM	CNFM CHFM	CNVM CVVM
			3270	**334**	**1.01**				**3330**	**339**	**1.01**	**1**	**-**	**6095**	**- 35**	**B-100**	**B-116**	**B-135**
			5400	550	1.30				5400	550	1.30	1	-	6100	- 35	B-101	B-117	B-136
41.4	164	16.7	5400	550	1.60	50.0	136	13.9	5400	550	1.60	1	-	6105	- 35	B-101	B-117	B-136
			7470	761	2.00				7490	764	2.00	1	-	6110	- 35	B-101	B-117	B-136
			7470	761	2.41				7490	764	2.41	1	-	6115	- 35	B-101	B-117	B-136
			3210	328	0.80				3280	334	0.80	1	-	6095	- 43	B-100	B-116	B-135
			5400	**550**	**1.04**				**5400**	**550**	**1.04**	**1**	**-**	**6100**	**- 43**	**B-101**	**B-117**	**B-136**
33.7	202	20.6	5400	550	1.44	40.7	167	17.0	5400	550	1.44	1	-	6105	- 43	B-101	B-117	B-136
			7610	776	1.73				7610	776	1.73	1	-	6110	- 43	B-101	B-117	B-136
			7610	776	2.03				7610	776	2.03	1	-	6115	- 43	B-101	B-117	B-136
			9810	1000	2.55				9640	983	2.55	1	-	6120	- 43	B-101	B-117	B-136
			5400	**550**	**1.03**				**5390**	**549**	**1.03**	**1**	**-**	**6105**	**- 51**	**B-101**	**B-117**	**B-136**
			7610	776	1.26				7610	776	1.26	1	-	6110	- 51	B-101	B-117	B-136
28.4	239	24.4	7610	776	1.48	34.3	198	20.2	7610	776	1.48	1	-	6115	- 51	B-101	B-117	B-136
			9810	1000	2.17				9810	1000	2.29	1	-	6120	- 51	B-101	B-117	B-136
			9810	1000	2.63				9810	1000	3.04	1	-	6125	- 51	B-101	B-117	B-136
			5400	550	0.91				5370	548	0.94	1	-	6105	- 59	B-101	B-117	B-136
			7610	**776**	**1.15**				**7610**	**776**	**1.15**	**1**	**-**	**6110**	**- 59**	**B-101**	**B-117**	**B-136**
24.6	277	28.2	7610	776	1.35	29.7	229	23.4	7610	776	1.35	1	-	6115	- 59	B-101	B-117	B-136
			9810	1000	1.73				9810	1000	1.73	1	-	6120	- 59	B-101	B-117	B-136
			9810	1000	2.16				9810	1000	2.16	1	-	6125	- 59	B-101	B-117	B-136
			13200	1340	2.81				12400	1270	2.92	1	-	6130	- 59	B-102	B-118	B-137
			7610	775	1.01				7610	776	1.01	1	-	6115	- 71	B-101	B-117	B-136
			9810	**1000**	**1.28**				**9810**	**1000**	**1.28**	**1**	**-**	**6120**	**- 71**	**B-101**	**B-117**	**B-136**
20.4	333	34.0	9810	1000	1.52	24.6	276	28.1	9810	1000	1.60	1	-	6125	- 71	B-101	B-117	B-136
			14000	1420	2.35				13100	1340	2.44	1	-	6130	- 71	B-102	B-118	B-137
			14000	1420	2.71				13100	1340	2.89	1	-	6135	- 71	B-102	B-118	B-137
			7550	770	1.01				7610	776	1.01	1	-	6115	- 87	B-101	B-117	B-136
			9810	**1000**	**1.26**				**9810**	**1000**	**1.26**	**1**	**-**	**6120**	**- 87**	**B-101**	**B-117**	**B-136**
			9810	1000	1.37				9810	1000	1.51	1	-	6125	- 87	B-101	B-117	B-136
16.7	408	41.6	14700	1500	1.89	20.1	338	34.5	14200	1440	1.89	1	-	6130	- 87	B-102	B-118	B-137
			14700	1500	2.20				14200	1440	2.55	1	-	6135	- 87	B-102	B-118	B-137
			16000	1630	2.64				16000	1630	2.64	1	-	6140	- 87	B-102	B-118	B-137
			16000	1630	2.88				16000	1630	3.31	1	-	6145	- 87	B-102	B-118	B-137
			9810	1000	1.14				9810	1000	1.37	1	-	6120DB	- 104	B-108	B-124	B-143
			9810	1000	1.36				9810	1000	1.64	1	-	6125DB	- 104	B-108	B-124	B-143
			14700	1500	1.69				14700	1500	2.03	1	-	6130DB	- 104	B-109	B-125	B-144
13.9	462	47.1	14700	1500	2.03	16.8	383	39.1	14700	1500	2.03	1	-	6135DB	- 104	B-109	B-125	B-144
			14700	1500	2.03				14700	1500	2.45	1	-	6135DC	- 104	B-109	B-125	B-144
			16000	1630	2.03				16000	1630	2.03	1	-	6140DB	- 104	B-109	B-125	B-144
			16000	1630	2.65				16000	1630	3.20	1	-	6140DC	- 104	B-109	B-125	B-144
			16000	1630	2.96				16000	1630	3.58	1	-	6145DC	- 104	B-109	B-125	B-144
			9810	1000	1.16				9810	1000	1.40	1	-	6125DB	- 121	B-108	B-124	B-143
			14700	1500	1.45				14700	1500	1.75	1	-	6130DB	- 121	B-109	B-125	B-144
12.0	538	54.8	14700	1500	1.75	14.5	446	45.4	14700	1500	2.03	1	-	6135DB	- 121	B-109	B-125	B-144
			16000	1630	2.03				16000	1630	2.03	1	-	6140DB	- 121	B-109	B-125	B-144
			16000	1630	2.28				16000	1630	2.75	1	-	6140DC	- 121	B-109	B-125	B-144
			16000	1630	2.40				16000	1630	2.90	1	-	6145DC	- 121	B-109	B-125	B-144

1. Combinations in **bold** are the recommended models for operations for 10 hours/day with uniform load (service factor is about 1.0 for motor rating at 50Hz).
2. Motor slippage may affect n_1 and n_2. Refer to technical data for details.
3. CNHM, CHHM, CNFM, CHFM, CNVM, and CVVM indicate types. Refer to page B-10 for details.
4. Lubrication method is different for each model. Refer to "Lubrication" section in page F-4~F-5 for details.
5. "6" at the end of "input capacity symbol" indicates models with 6P motor. Other models come with 4P motor.

Selection Tables Gearmotors

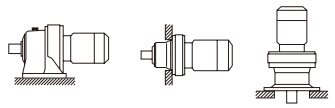

n_1: Motor Speed

0.75 kW	Hz	50Hz		60Hz	
	P	4	6	4	6
	n_1 r/min	1450	980	1750	1165

50Hz						60Hz						Nomenclature	Page of Dimension Sheet		
Output Speed n_2 [r/min]	Output Torque Tout [N·m]	[kgf·m]	Allowable Radial Load Pro [N]	[kgf]	SF	Output Speed n_2 [r/min]	Output Torque Tout [N·m]	[kgf·m]	Allowable Radial Load Pro [N]	[kgf]	SF	Input Capacity Symbol - Frame Size - Reduction Ratio	CNHM CHHM	CNFM CHFM	CNVM CVVM
10.1	525	53.5	9810	1000	*	12.2	525	53.5	9810	1000	*	1 - 6120DB - 143	B-108	B-124	B-143
	636	64.8	9810	1000	0.98		527	53.7	9810	1000	1.20	1 - 6125DB - 143	B-108	B-124	B-143
			14700	1500	1.23				14700	1500	1.48	1 - 6130DB - 143	B-109	B-125	B-144
			14700	1500	1.48				14700	1500	1.78	1 - 6135DB - 143	B-109	B-125	B-144
			16000	1630	1.93				16000	1630	2.03	1 - 6140DB - 143	B-109	B-125	B-144
			16000	1630	1.93				16000	1630	2.33	1 - 6140DC - 143	B-109	B-125	B-144
			16000	1630	2.03				16000	1630	2.03	1 - 6145DB - 143	B-109	B-125	B-144
			16000	1630	2.15				16000	1630	2.60	1 - 6145DC - 143	B-109	B-125	B-144
			22100	2250	2.76				22100	2250	3.33	1 - 6160DB - 143	B-110	B-126	B-145
8.79	525	53.5	9810	1000	*	10.6	525	53.5	9810	1000	*	1 - 6120DB - 165	B-108	B-124	B-143
	734	74.8	9810	1000	0.86		608	62.0	9810	1000	1.04	1 - 6125DB - 165	B-108	B-124	B-143
			14700	**1500**	**1.06**				**14700**	**1500**	**1.28**	**1 - 6130DB - 165**	**B-109**	**B-125**	**B-144**
			14700	1500	1.28				14700	1500	1.55	1 - 6135DB - 165	B-109	B-125	B-144
			16000	1630	1.67				16000	1630	2.02	1 - 6140DB - 165	B-109	B-125	B-144
			16000	1630	1.85				16000	1630	2.03	1 - 6145DB - 165	B-109	B-125	B-144
			16000	1630	1.85				16000	1630	2.23	1 - 6145DC - 165	B-109	B-125	B-144
			22100	2250	2.03				22100	2250	2.03	1 - 6160DA - 165	B-110	B-126	B-145
			22100	2250	2.39				22100	2250	2.89	1 - 6160DB - 165	B-110	B-126	B-145
			22100	2250	2.86				22100	2250	3.46	1 - 6165DB - 165	B-110	B-126	B-145
7.44	630	64.2	9810	1000	*	8.97	630	64.2	9810	1000	*	1 - 6125DB - 195	B-108	B-124	B-143
	867	88.4	14700	1500	1.08		718	73.2	14700	1500	1.31	1 - 6135DB - 195	B-109	B-125	B-144
			16000	1630	1.41				16000	1630	1.71	1 - 6140DB - 195	B-109	B-125	B-144
			16000	1630	1.57				16000	1630	1.89	1 - 6145DB - 195	B-109	B-125	B-144
			22100	2250	2.02				22100	2250	2.03	1 - 6160DA - 195	B-110	B-126	B-145
			22100	2250	2.02				22100	2250	2.44	1 - 6160DB - 195	B-110	B-126	B-145
			22100	2250	2.03				22100	2250	2.03	1 - 6165DA - 195	B-110	B-126	B-145
			22100	2250	2.42				22100	2250	2.92	1 - 6165DB - 195	B-110	B-126	B-145
			29500	3010	2.92				29500	3010	3.52	1 - 6170DB - 195	B-110	B-126	B-145
6.28	630	64.2	9810	1000	*	7.58	630	64.2	9810	1000	*	1 - 6125DB - 231	B-108	B-124	B-143
	780	79.5	14700	1500	*		780	79.5	14700	1500	*	1 - 6130DB - 231	B-109	B-125	B-144
	1030	105	14700	1500	0.92		851	86.7	14700	1500	1.10	1 - 6135DB - 231	B-109	B-125	B-144
			16000	1630	1.19				16000	1630	1.44	1 - 6140DB - 231	B-109	B-125	B-144
			16000	1630	1.30				16000	1630	1.57	1 - 6145DB - 231	B-109	B-125	B-144
			22100	2250	1.71				22100	2250	2.03	1 - 6160DA - 231	B-110	B-126	B-145
			22100	2250	2.03				22100	2250	2.03	1 - 6165DA - 231	B-110	B-126	B-145
			22100	2250	2.04				22100	2250	2.47	1 - 6165DB - 231	B-110	B-126	B-145
			29500	3010	2.03				29500	3010	2.03	1 - 6170DA - 231	B-110	B-126	B-145
			29500	3010	2.46				29500	3010	2.97	1 - 6170DB - 231	B-110	B-126	B-145
5.31	780	79.5	14700	1500	*	6.41	780	79.5	14700	1500	*	1 - 6130DB - 273	B-109	B-125	B-144
	940	95.8	14700	1500	*		940	95.8	14700	1500	*	1 - 6135DB - 273	B-109	B-125	B-144
	1210	124	**16000**	**1630**	**1.01**		1010	103	**16000**	**1630**	**1.22**	**1 - 6140DB - 273**	**B-109**	**B-125**	**B-144**
			16000	1630	1.10				16000	1630	1.33	1 - 6145DB - 273	B-109	B-125	B-144
			22100	2250	1.45				22100	2250	1.75	1 - 6160DA - 273	B-110	B-126	B-145
			22100	2250	1.73				22100	2250	2.03	1 - 6165DA - 273	B-110	B-126	B-145
			29500	3010	2.03				29500	3010	2.03	1 - 6170DA - 273	B-110	B-126	B-145
			29500	3010	2.08				29500	3010	2.52	1 - 6170DB - 273	B-110	B-126	B-145
			29500	3010	2.03				29500	3010	2.03	1 - 6175DA - 273	B-110	B-126	B-145
			29500	3010	2.60				29500	3010	3.13	1 - 6175DB - 273	B-110	B-126	B-145

6. "☆" indicates models manufactured with reducer and motor separately mounted on a common baseplate (horizontal shaft direction) or on an adaptor (vertical shaft direction). Consult us for details, including dimensions.
7. Allowable radial load (Pro) is the value at the midpoint of the slow speed shaft.
8. "(K)" indicates models with reduction ratios equal to nominal ratio. Refer to Table A-3 "6000SK Series (Actual Reduction Ratio)" on page A-4 for actual reduction ratio. Indicated reduction ratio is the same as actual reduction ratio for other models.
9. Maintain torque load during operation within "Output torque" in the table for models with "*" in the SF column. They cannot be operated with 100% motor rating.

Selection Tables Gearmotors

n_1: Motor Speed

0.75 kW	Hz	50Hz		60Hz	
	P	4	6	4	6
	n_1 r/min	1450	980	1750	1165

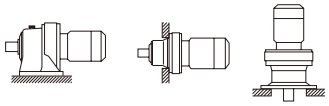

CHHM/CNHM CHFM/CNFM CVVM/CNVM

50Hz						60Hz						Nomenclature	Page of Dimension Sheet		
Output Speed n_2 [r/min]	Output Torque Tout [N·m]	[kgf·m]	Allowable Radial Load Pro [N]	[kgf]	SF	Output Speed n_2 [r/min]	Output Torque Tout [N·m]	[kgf·m]	Allowable Radial Load Pro [N]	[kgf]	SF	Input Capacity Symbol - Frame Size - Reduction Ratio	CNHM CHHM	CNFM CHFM	CNVM CVVM
4.55	940	95.8	14700	1500	*	5.49	940	95.8	14700	1500	*	1 - 6135DB - 319	B-109	B-125	B-144
	1420	145	15500	1580	0.97		1180	120	16000	1630	1.17	1 - 6145DB - 319	B-109	B-125	B-144
			22100	2250	1.24				22100	2250	1.49	1 - 6160DA - 319	B-110	B-126	B-145
			22100	2250	1.48				22100	2250	1.79	1 - 6165DA - 319	B-110	B-126	B-145
			29500	3010	1.78				29500	3010	2.03	1 - 6170DA - 319	B-110	B-126	B-145
			29500	3010	1.78				29500	3010	2.15	1 - 6170DB - 319	B-110	B-126	B-145
			29500	3010	2.03				29500	3010	2.03	1 - 6175DA - 319	B-110	B-126	B-145
			29500	3010	2.22				29500	3010	2.68	1 - 6175DB - 319	B-110	B-126	B-145
			41700	4250	2.86				41700	4250	3.45	1 - 6180DA - 319	B-110	B-126	B-145
3.85	1230	125	16000	1630	*	4.64	1230	125	16000	1630	*	1 - 6140DB - 377	B-109	B-125	B-144
	1370	140	15800	1610	*		1370	140	15800	1610	*	1 - 6145DB - 377	B-109	B-125	B-144
	1680	171	14100	1440	0.82		1390	142	15700	1600	0.98	1 - 6145DB - 377	B-109	B-125	B-144
			22100	**2250**	**1.05**				**22100**	**2250**	**1.26**	**1 - 6160DA - 377**	**B-110**	**B-126**	**B-145**
			22100	2250	1.25				22100	2250	1.51	1 - 6165DA - 377	B-110	B-126	B-145
			29500	3010	1.51				29500	3010	1.82	1 - 6170DA - 377	B-110	B-126	B-145
			29500	3010	1.88				29500	3010	2.03	1 - 6175DA - 377	B-110	B-126	B-145
			29500	3010	1.88				29500	3010	2.27	1 - 6175DB - 377	B-110	B-126	B-145
			41700	4250	2.42				41700	4250	2.92	1 - 6180DA - 377	B-110	B-126	B-145
			41700	4250	2.98				41700	4250	3.60	1 - 6185DA - 377	B-110	B-126	B-145
3.07	1370	140	15700	1600	*	3.70	1370	140	15700	1600	*	1 - 6145DB - 473	B-109	B-125	B-144
	1740	177	22100	2250	*		1740	177	22100	2250	*	1 - 6160DA - 473	B-110	B-126	B-145
	2100	214	**22100**	**2250**	**1.00**		1740	178	**22100**	**2250**	**1.21**	**1 - 6165DA - 473**	**B-110**	**B-126**	**B-145**
			29500	3010	1.20				29500	3010	1.45	1 - 6170DA - 473	B-110	B-126	B-145
			29500	3010	1.50				29500	3010	1.81	1 - 6175DA - 473	B-110	B-126	B-145
			41700	4250	1.93				41700	4250	2.33	1 - 6180DA - 473	B-110	B-126	B-145
			41700	4250	2.38				41700	4250	2.87	1 - 6185DA - 473	B-110	B-126	B-145
2.59	1740	177	22100	2250	*	3.13	1740	177	22100	2250	*	1 - 6160DA - 559	B-110	B-126	B-145
	2490	253	22100	2250	0.85		2060	210	22100	2250	1.02	1 - 6165DA - 559	B-110	B-126	B-145
			29500	**3010**	**1.02**				**29500**	**3010**	**1.23**	**1 - 6170DA - 559**	**B-110**	**B-126**	**B-145**
			29500	3010	1.27				29500	3010	1.53	1 - 6175DA - 559	B-110	B-126	B-145
			41700	4250	1.63				41700	4250	1.97	1 - 6180DA - 559	B-110	B-126	B-145
			41700	4250	2.01				41700	4250	2.43	1 - 6185DA - 559	B-110	B-126	B-145
			59000	6010	2.57				59000	6010	3.10	1 - 6190DA - 559	B-111	B-128	B-147
2.23	2100	214	22100	2250	*	2.70	2100	214	22100	2250	*	1 - 6165DA - 649	B-110	B-126	B-145
	2890	294	29500	3010	1.09		2390	244	29500	3010	1.32	1 - 6175DA - 649	B-110	B-126	B-145
			41700	4250	1.40				41700	4250	1.69	1 - 6180DA - 649	B-110	B-126	B-145
			41700	4250	1.73				41700	4250	2.09	1 - 6185DA - 649	B-110	B-126	B-145
			59000	6010	2.21				59000	6010	2.67	1 - 6190DA - 649	B-111	B-128	B-147
			59000	6010	2.76				59000	6010	3.33	1 - 6195DA - 649	B-111	B-128	B-147
1.98	2100	214	22100	2250	*	2.39	2100	214	22100	2250	*	1 - 6165DA - 731	B-110	B-126	B-145
	2530	258	29500	3010	*		2530	258	29500	3010	*	1 - 6170DA - 731	B-110	B-126	B-145
	3250	331	29500	3010	0.97		2690	274	29500	3010	1.17	1 - 6175DA - 731	B-110	B-126	B-145
			41700	4250	1.25				41700	4250	1.51	1 - 6180DA - 731	B-110	B-126	B-145
			41700	4250	1.54				41700	4250	1.86	1 - 6185DA - 731	B-110	B-126	B-145
			59000	6010	1.96				59000	6010	2.37	1 - 6190DA - 731	B-111	B-128	B-147
			59000	6010	2.45				59000	6010	2.96	1 - 6195DA - 731	B-111	B-128	B-147
1.72	2530	258	29500	3010	*	2.08	2530	258	29500	3010	*	1 - 6170DA - 841	B-110	B-126	B-145
	3740	381	29500	3010	0.84		3100	316	29500	3010	1.02	1 - 6175DA - 841	B-110	B-126	B-145
			41700	4250	1.08				41700	4250	1.31	1 - 6180DA - 841	B-110	B-126	B-145
			41700	4250	1.34				41700	4250	1.61	1 - 6185DA - 841	B-110	B-126	B-145
			59000	6010	1.71				59000	6010	2.06	1 - 6190DA - 841	B-111	B-128	B-147
			59000	6010	2.13				59000	6010	2.57	1 - 6195DA - 841	B-111	B-128	B-147
1.45	3150	321	29500	3010	*	1.74	3150	321	29500	3010	*	1 - 6175DA - 1003	B-110	B-126	B-145
	4460	455	41700	4250	1.12		3690	377	41700	4250	1.35	1 - 6185DA - 1003	B-110	B-126	B-145
			59000	6010	1.43				59000	6010	1.73	1 - 6190DA - 1003	B-111	B-128	B-147
			59000	6010	1.79				59000	6010	2.15	1 - 6195DA - 1003	B-111	B-128	B-147

1. Combinations in **bold** are the recommended models for operations for 10 hours/day with uniform load (service factor is about 1.0 for motor rating at 50Hz).
2. Motor slippage may affect n_1 and n_2. Refer to technical data for details.
3. CNHM, CHHM, CNFM, CHFM, CNVM, and CVVM indicate types. Refer to page B-10 for details.
4. Lubrication method is different for each model. Refer to "Lubrication" section in page F-4~F-5 for details.
5. "6" at the end of "input capacity symbol" indicates models with 6P motor. Other models come with 4P motor.

Selection Tables Gearmotors

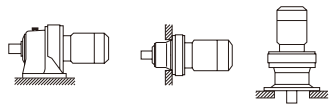

n_1: Motor Speed

0.75 kW	Hz	50Hz		60Hz	
	P	4	6	4	6
	n_1 r/min	1450	980	1750	1165

50Hz						60Hz						Nomenclature	Page of Dimension Sheet		
Output Speed n_2 [r/min]	Output Torque Tout [N·m]	[kgf·m]	Allowable Radial Load Pro [N]	[kgf]	SF	Output Speed n_2 [r/min]	Output Torque Tout [N·m]	[kgf·m]	Allowable Radial Load Pro [N]	[kgf]	SF	Input Capacity Symbol - Frame Size - Reduction Ratio	CNHM CHHM	CNFM CHFM	CNVM CVVM
1.16	4060	414	41700	4250	*	1.40	4060	414	41700	4250	*	1 - 6180DA - 1247	B-110	B-126	B-145
			41700	4250	0.90				41700	4250	1.09	1 - 6185DA - 1247	B-110	B-126	B-145
	5540	565	59000	6010	1.15		4590	468	59000	6010	1.39	1 - 6190DA - 1247	B-111	B-128	B-147
			59000	6010	1.44				59000	6010	1.73	1 - 6195DA - 1247	B-111	B-128	B-147
0.980	4060	414	41700	4250	*	1.18	4060	414	41700	4250	*	1 - 6180DA - 1479	B-110	B-126	B-145
	5000	510	41700	4250	*		5000	510	41700	4250	*	1 - 6185DA - 1479	B-110	B-126	B-145
	6580	670	58800	5990	1.21		5450	555	59000	6010	1.46	1 - 6195DA - 1479	B-111	B-128	B-147
0.784	5000	510	41700	4250	*	0.946	5000	510	41700	4250	*	1 - 6185DA - 1849	B-110	B-126	B-145
	6380	650	59000	6010	*		6380	650	59000	6010	*	1 - 6190DA - 1849	B-111	B-128	B-147
	8220	838	58900	6000	0.97		6810	694	59000	6010	1.17	1 - 6195DA - 1849	B-111	B-128	B-147
0.702	5000	510	41600	4240	*	0.847	5000	510	41600	4240	*	1 - 6185DA - 2065	B-110	B-126	B-145
	6380	650	58600	5970	*		6380	650	58600	5970	*	1 - 6190DA - 2065	B-111	B-128	B-147
	9180	936	57800	5890	0.87		7610	775	58200	5940	1.05	1 - 6195DA - 2065	B-111	B-128	B-147
0.572	6380	650	58600	5970	*	0.690	6380	650	58600	5970	*	1 - 6190DA - 2537	B-111	B-128	B-147
	7960	811	58100	5930	*		7960	811	58100	5930	*	1 - 6195DA - 2537	B-111	B-128	B-147
	9300	948	84100	8570	*		9300	948	84100	8570	*	1 - 6205DA - 2537	B-112	B-129	B-148
	11300	1150	84100	8570	0.82		9350	953	84100	8570	1.00	1 - 6205DA - 2537	B-112	B-129	B-148
0.476	6380	650	58900	6000	*	0.575	6380	650	58900	6000	*	1 - 6190DA - 3045	B-111	B-128	B-147
	7960	811	58400	5950	*		7960	811	58400	5950	*	1 - 6195DA - 3045	B-111	B-128	B-147
	8760	893	84100	8570	*		8760	893	84100	8570	*	1 - 6205DA - 3045	B-112	B-129	B-148
0.417	6380	650	58600	5970	*	0.503	6380	650	58600	5970	*	1 - 6190DA - 3481	B-111	B-128	B-147
	7960	811	58100	5930	*		7960	811	58100	5930	*	1 - 6195DA - 3481	B-111	B-128	B-147
	9300	948	84100	8570	*		9300	948	84100	8570	*	1 - 6205DA - 3481	B-112	B-129	B-148
0.327	6380	650	58900	6000	*	0.394	6380	650	58900	6000	*	1 - 6190DA - 4437	B-111	B-128	B-147
	7960	811	58400	5950	*		7960	811	58400	5950	*	1 - 6195DA - 4437	B-111	B-128	B-147
	8760	893	84100	8570	*		8760	893	84100	8570	*	1 - 6205DA - 4437	B-112	B-129	B-148
0.282	6380	650	58900	6000	*	0.341	6380	650	58900	6000	*	1 - 6190DA - 5133	B-111	B-128	B-147
	7960	811	58400	5950	*		7960	811	58400	5950	*	1 - 6195DA - 5133	B-111	B-128	B-147
	9300	948	84100	8570	*		9300	948	84100	8570	*	1 - 6205DA - 5133	B-112	B-129	B-148
0.235	6380	650	58900	6000	*	0.283	6380	650	58900	6000	*	1 - 6190DA - 6177	B-111	B-128	B-147
	7960	811	58400	5950	*		7960	811	58400	5950	*	1 - 6195DA - 6177	B-111	B-128	B-147
	8760	893	84100	8570	*		8760	893	84100	8570	*	1 - 6205DA - 6177	B-112	B-129	B-148
0.192	6380	650	58900	6000	*	0.231	6380	650	58900	6000	*	1 - 6190DA - 7569	B-111	B-128	B-147
	7960	811	58400	5950	*		7960	811	58400	5950	*	1 - 6195DA - 7569	B-111	B-128	B-147
	8760	893	84100	8570	*		8760	893	84100	8570	*	1 - 6205DA - 7569	B-112	B-129	B-148

6. "☆" indicates models manufactured with reducer and motor separately mounted on a common baseplate (horizontal shaft direction) or on an adaptor (vertical shaft direction). Consult us for details, including dimensions.
7. Allowable radial load (Pro) is the value at the midpoint of the slow speed shaft.
8. "(K)" indicates models with reduction ratios equal to nominal ratio. Refer to Table A-3 "6000SK Series (Actual Reduction Ratio)" on page A-4 for actual reduction ratio. Indicated reduction ratio is the same as actual reduction ratio for other models.
9. Maintain torque load during operation within "Output torque" in the table for models with "*" in the SF column. They cannot be operated with 100% motor rating.

Selection Tables Gearmotors

n_1: Motor Speed

1.1 kW	Hz	50Hz		60Hz	
	P	4	6	4	6
	n_1 r/min	1450	980	1750	1165

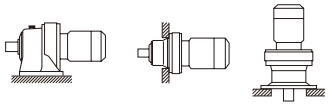

CHHM/CNHM CHFM/CNFM CVVM/CNVM

50Hz						60Hz						Nomenclature				Page of Dimension Sheet		
Output Speed n_2 [r/min]	Output Torque Tout [N·m]	[kgf·m]	Allowable Radial Load Pro [N]	[kgf]	SF	Output Speed n_2 [r/min]	Output Torque Tout [N·m]	[kgf·m]	Allowable Radial Load Pro [N]	[kgf]	SF	Input Capacity Symbol	Frame Size	Reduction Ratio		CNHM CHHM	CNFM CHFM	CNVM CVVM
580	17.2	1.75	1200	122	1.50	700	14.3	1.45	1140	116	1.50	1H -	6080SK	- 2.5	(K)	B-98	-	B-133
			1200	122	1.87				1140	116	1.87	1H -	6085SK	- 2.5	(K)	B-98	-	B-133
			2230	227	2.18				2120	216	2.18	1H -	6090SK	- 2.5	(K)	B-98	-	B-133
			2230	227	2.46				2120	216	2.46	1H -	6095SK	- 2.5	(K)	B-98	-	B-133
			2230	227	2.90				2120	216	2.90	1H -	6100SK	- 2.5	(K)	B-99	-	B-134
			2230	227	3.41				2120	216	3.41	1H -	6105SK	- 2.5	(K)	B-99	-	B-134
483	20.6	2.10	1250	127	1.50	583	17.1	1.74	1200	122	1.50	1H -	6080SK	- 3	(K)	B-98	-	B-133
			1250	127	1.87				1200	122	1.87	1H -	6085SK	- 3	(K)	B-98	-	B-133
			2310	235	2.13				2210	225	2.13	1H -	6090SK	- 3	(K)	B-98	-	B-133
			2310	235	2.39				2210	225	2.39	1H -	6095SK	- 3	(K)	B-98	-	B-133
			2310	235	3.00				2210	225	3.00	1H -	6100SK	- 3	(K)	B-99	-	B-134
363	27.5	2.81	1330	136	1.50	438	22.8	2.33	1290	131	1.50	1H -	6080SK	- 4	(K)	B-98	-	B-133
			1330	136	1.87				1290	131	1.87	1H -	6085SK	- 4	(K)	B-98	-	B-133
			2560	261	2.13				2450	250	2.13	1H -	6090SK	- 4	(K)	B-98	-	B-133
			2560	261	2.39				2450	250	2.39	1H -	6095SK	- 4	(K)	B-98	-	B-133
			2560	261	2.93				2450	250	2.93	1H -	6100SK	- 4	(K)	B-99	-	B-134
			2560	261	3.45				2450	250	3.45	1H -	6105SK	- 4	(K)	B-99	-	B-134
290	34.4	3.51	1420	145	1.41	350	28.5	2.91	1370	140	1.41	1H -	6080SK	- 5	(K)	B-98	-	B-133
			1420	145	1.65				1370	140	1.65	1H -	6085SK	- 5	(K)	B-98	-	B-133
			2740	279	2.03				2600	265	2.03	1H -	6090SK	- 5	(K)	B-98	-	B-133
			2740	279	2.39				2600	265	2.39	1H -	6095SK	- 5	(K)	B-98	-	B-133
			2740	279	2.86				2600	265	2.86	1H -	6100SK	- 5	(K)	B-99	-	B-134
			2740	279	3.36				2600	265	3.36	1H -	6105SK	- 5	(K)	B-99	-	B-134
242	41.3	4.21	**1450**	**148**	**1.18**	292	34.2	3.49	**1410**	**144**	**1.18**	**1H -**	**6080SK**	**- 6**	**(K)**	**B-98**	**-**	**B-133**
			1450	148	1.47				1410	144	1.47	1H -	6085SK	- 6	(K)	B-98	-	B-133
			2800	285	1.74				2670	272	1.74	1H -	6090SK	- 6	(K)	B-98	-	B-133
			2800	285	2.06				2670	272	2.06	1H -	6095SK	- 6	(K)	B-98	-	B-133
			2800	285	2.43				2670	272	2.43	1H -	6100SK	- 6	(K)	B-99	-	B-134
			2800	285	2.85				2670	272	2.85	1H -	6105SK	- 6	(K)	B-99	-	B-134
			2820	287	1.05				2650	270	1.05	1H -	6090	- 6		B-100	B-116	B-135
			2820	287	1.38				2650	270	1.38	1H -	6095	- 6		B-100	B-116	B-135
			4140	422	2.14				3900	397	2.14	1H -	6100	- 6		B-101	B-117	B-136
			4140	422	2.89				3900	397	2.89	1H -	6105	- 6		B-101	B-117	B-136
181	55.1	5.61	**1490**	**152**	**1.00**	219	45.6	4.65	**1450**	**148**	**1.00**	**1H -**	**6080SK**	**- 8**	**(K)**	**B-98**	**-**	**B-133**
			1490	152	1.25				1450	148	1.25	1H -	6085SK	- 8	(K)	B-98	-	B-133
			3060	312	1.37				2930	299	1.37	1H -	6090SK	- 8	(K)	B-98	-	B-133
			3060	312	1.61				2930	299	1.61	1H -	6095SK	- 8	(K)	B-98	-	B-133
			3060	312	1.92				2930	299	1.92	1H -	6100SK	- 8	(K)	B-99	-	B-134
			3060	312	2.26				2930	299	2.26	1H -	6105SK	- 8	(K)	B-99	-	B-134
			4080	416	3.37				3870	395	3.37	1H -	6110SK	- 8	(K)	B-99	-	B-134
			3130	319	1.05				2950	301	1.05	1H -	6090	- 8		B-100	B-116	B-135
			3130	319	1.38				2950	301	1.38	1H -	6095	- 8		B-100	B-116	B-135
			4620	471	2.14				4350	443	2.14	1H -	6100	- 8		B-101	B-117	B-136
			4620	471	2.89				4350	443	2.89	1H -	6105	- 8		B-101	B-117	B-136
145	68.8	7.02	**1540**	**157**	**1.00**	175	57.0	5.81	**1510**	**154**	**1.00**	**1H -**	**6085SK**	**- 10**	**(K)**	**B-98**	**-**	**B-133**
			3220	328	1.27				3070	313	1.27	1H -	6090SK	- 10	(K)	B-98	-	B-133
			3220	328	1.61				3070	313	1.61	1H -	6095SK	- 10	(K)	B-98	-	B-133
			3220	328	1.80				3070	313	1.80	1H -	6100SK	- 10	(K)	B-99	-	B-134
			3220	328	2.00				3070	313	2.00	1H -	6105SK	- 10	(K)	B-99	-	B-134
			4400	449	2.78				4180	426	2.78	1H -	6110SK	- 10	(K)	B-99	-	B-134
			4400	449	3.47				4180	426	3.47	1H -	6115SK	- 10	(K)	B-99	-	B-134
132	75.7	7.72	**3340**	**340**	**1.05**	159	62.7	6.39	**3340**	**340**	**1.05**	**1H -**	**6090**	**- 11**		**B-100**	**B-116**	**B-135**
			3340	340	1.38				3340	340	1.38	1H -	6095	- 11		B-100	B-116	B-135
			5250	536	2.14				4950	504	2.14	1H -	6100	- 11		B-101	B-117	B-136
			5250	536	2.89				4950	504	2.89	1H -	6105	- 11		B-101	B-117	B-136

1. Combinations in **bold** are the recommended models for operations for 10 hours/day with uniform load (service factor is about 1.0 for motor rating at 50Hz).
2. Motor slippage may affect n_1 and n_2. Refer to technical data for details.
3. CNHM, CHHM, CNFM, CHFM, CNVM, and CVVM indicate types. Refer to page B-10 for details.
4. Lubrication method is different for each model. Refer to "Lubrication" section in page F-4~F-5 for details.
5. "6" at the end of "input capacity symbol" indicates models with 6P motor. Other models come with 4P motor.

Selection Tables Gearmotors

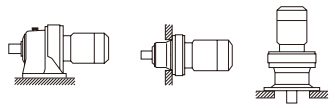

n_1: Motor Speed

1.1 kW	Hz	50Hz		60Hz	
	P	4	6	4	6
	n_1 r/min	1450	980	1750	1165

50Hz						60Hz						Nomenclature				Page of Dimension Sheet		
Output Speed n_2 [r/min]	Output Torque Tout [N·m]	Output Torque Tout [kgf·m]	Allowable Radial Load Pro [N]	Allowable Radial Load Pro [kgf]	SF	Output Speed n_2 [r/min]	Output Torque Tout [N·m]	Output Torque Tout [kgf·m]	Allowable Radial Load Pro [N]	Allowable Radial Load Pro [kgf]	SF	Input Capacity Symbol	Frame Size	Reduction Ratio		CNHM CHHM	CNFM CHFM	CNVM CVVM
			3340	**340**	**1.05**				**3340**	**340**	**1.05**	**1H -**	**6090**	**- 13**		**B-100**	**B-116**	**B-135**
112	89.5	9.12	3340	340	1.38	135	74.1	7.56	3340	340	1.38	1H -	6095	- 13		B-100	B-116	B-135
			5400	550	2.14				5140	524	2.14	1H -	6100	- 13		B-101	B-117	B-136
			5400	550	2.89				5140	524	2.89	1H -	6105	- 13		B-101	B-117	B-136
			3340	**340**	**1.05**				**3340**	**340**	**1.05**	**1H -**	**6090**	**- 15**		**B-100**	**B-116**	**B-135**
96.7	103	10.5	3340	340	1.38	117	85.5	8.72	3340	340	1.38	1H -	6095	- 15		B-100	B-116	B-135
			5400	550	2.14				5400	550	2.14	1H -	6100	- 15		B-101	B-117	B-136
			5400	550	2.89				5400	550	2.89	1H -	6105	- 15		B-101	B-117	B-136
			3340	**340**	**1.05**				**3340**	**340**	**1.05**	**1H -**	**6090**	**- 17**		**B-100**	**B-116**	**B-135**
			3340	340	1.38				3340	340	1.38	1H -	6095	- 17		B-100	B-116	B-135
85.3	117	11.9	5400	550	1.81	103	96.9	9.88	5400	550	1.81	1H -	6100	- 17		B-101	B-117	B-136
			5400	550	2.24				5400	550	2.24	1H -	6105	- 17		B-101	B-117	B-136
			6660	679	2.89				6270	639	2.89	1H -	6110	- 17		B-101	B-117	B-136
			3340	340	1.37				3340	340	1.38	1H -	6095	- 21		B-100	B-116	B-135
			5400	550	1.73				5400	550	1.75	1H -	6100	- 21		B-101	B-117	B-136
69.0	145	14.7	5400	550	2.07	83.3	120	12.2	5400	550	2.13	1H -	6105	- 21		B-101	B-117	B-136
			7080	722	2.47				6670	679	2.47	1H -	6110	- 21		B-101	B-117	B-136
			7080	722	2.83				6670	679	2.83	1H -	6115	- 21		B-101	B-117	B-136
			5400	**550**	**1.15**				**5400**	**550**	**1.15**	**1H -**	**6100**	**- 25**		**B-101**	**B-117**	**B-136**
			5400	550	1.52				5400	550	1.52	1H -	6105	- 25		B-101	B-117	B-136
58.0	172	17.5	7180	732	1.74	70.0	143	14.5	6770	690	1.74	1H -	6110	- 25		B-101	B-117	B-136
			7180	732	2.02				6770	690	2.02	1H -	6115	- 25		B-101	B-117	B-136
			8700	887	2.81				8190	835	2.81	1H -	6120	- 25		B-101	B-117	B-136
			5400	**550**	**1.10**				**5400**	**550**	**1.10**	**1H -**	**6100**	**- 29**		**B-101**	**B-117**	**B-136**
			5400	550	1.45				5400	550	1.45	1H -	6105	- 29		B-101	B-117	B-136
50.0	200	20.3	7350	750	1.73	60.3	165	16.9	6960	709	1.73	1H -	6110	- 29		B-101	B-117	B-136
			7350	750	2.02				6960	709	2.02	1H -	6115	- 29		B-101	B-117	B-136
			9050	922	2.61				8510	868	2.72	1H -	6120	- 29		B-101	B-117	B-136
			5400	**550**	**1.09**				**5400**	**550**	**1.09**	**1H -**	**6105**	**- 35**		**B-101**	**B-117**	**B-136**
			7400	754	1.36				7430	758	1.36	1H -	6110	- 35		B-101	B-117	B-136
41.4	241	24.6	7400	754	1.65	50.0	200	20.3	7430	758	1.65	1H -	6115	- 35		B-101	B-117	B-136
			9560	975	2.15				9000	918	2.26	1H -	6120	- 35		B-101	B-117	B-136
			9560	975	2.62				9000	918	2.89	1H -	6125	- 35		B-101	B-117	B-136
			5400	550	0.98				5380	548	0.98	1H -	6105	- 43		B-101	B-117	B-136
			7610	**776**	**1.18**				**7610**	**776**	**1.18**	**1H -**	**6110**	**- 43**		**B-101**	**B-117**	**B-136**
33.7	296	30.2	7610	776	1.38	40.7	245	25.0	7610	776	1.38	1H -	6115	- 43		B-101	B-117	B-136
			9810	1000	1.74				9580	976	1.74	1H -	6120	- 43		B-101	B-117	B-136
			9810	1000	2.13				9580	976	2.16	1H -	6125	- 43		B-101	B-117	B-136
			12000	1220	2.64				11300	1150	2.72	1H -	6130	- 43		B-102	B-118	B-137
			7600	**775**	**1.01**				**7610**	**776**	**1.01**	**1H -**	**6115**	**- 51**		**B-101**	**B-117**	**B-136**
			9810	1000	1.48				9810	1000	1.56	1H -	6120	- 51		B-101	B-117	B-136
28.4	351	35.8	9810	1000	1.79	34.3	291	29.6	9810	1000	2.07	1H -	6125	- 51		B-101	B-117	B-136
			12500	1270	2.22				11800	1200	2.31	1H -	6130	- 51		B-102	B-118	B-137
			12500	1270	2.32				11800	1200	2.66	1H -	6135	- 51		B-102	B-118	B-137
			7570	772	0.92				7610	776	0.92	1H -	6115	- 59		B-101	B-117	B-136
			9810	**1000**	**1.18**				**9810**	**1000**	**1.18**	**1H -**	**6120**	**- 59**		**B-101**	**B-117**	**B-136**
			9810	1000	1.47				9810	1000	1.47	1H -	6125	- 59		B-101	B-117	B-136
24.6	406	41.4	13100	1340	1.92	29.7	336	34.3	12300	1260	1.99	1H -	6130	- 59		B-102	B-118	B-137
			13100	1340	2.22				12300	1260	2.29	1H -	6135	- 59		B-102	B-118	B-137
			16000	1630	2.69				16000	1630	2.69	1H -	6140	- 59		B-102	B-118	B-137
			16000	1630	2.89				16000	1630	3.32	1H -	6145	- 59		B-102	B-118	B-137
			9810	**1000**	**1.04**				**9810**	**1000**	**1.09**	**1H -**	**6125**	**- 71**		**B-101**	**B-117**	**B-136**
			13900	1410	1.60				13100	1330	1.66	1H -	6130	- 71		B-102	B-118	B-137
20.4	489	49.8	13900	1410	1.85	24.6	405	41.3	13100	1330	1.97	1H -	6135	- 71		B-102	B-118	B-137
			16000	1630	2.21				16000	1630	2.21	1H -	6140	- 71		B-102	B-118	B-137
			16000	1630	2.38				16000	1630	2.75	1H -	6145	- 71		B-102	B-118	B-137

6. "☆" indicates models manufactured with reducer and motor separately mounted on a common baseplate (horizontal shaft direction) or on an adaptor (vertical shaft direction). Consult us for details, including dimensions.
7. Allowable radial load (Pro) is the value at the midpoint of the slow speed shaft.
8. "(K)" indicates models with reduction ratios equal to nominal ratio. Refer to Table A-3 "6000SK Series (Actual Reduction Ratio)" on page A-4 for actual reduction ratio. Indicated reduction ratio is the same as actual reduction ratio for other models.
9. Maintain torque load during operation within "Output torque" in the table for models with "*" in the SF column. They cannot be operated with 100% motor rating.

Selection Tables Gearmotors

n_1: Motor Speed

1.1 kW	Hz	50Hz		60Hz	
	P	4	6	4	6
	n_1 r/min	1450	980	1750	1165

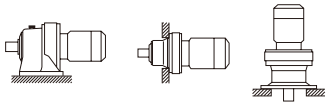

CHHM/CNHM CHFM/CNFM CVVM/CNVM

50Hz						60Hz						Nomenclature				Page of Dimension Sheet		
Output Speed n_2 [r/min]	Output Torque Tout [N·m]	[kgf·m]	Allowable Radial Load Pro [N]	[kgf]	SF	Output Speed n_2 [r/min]	Output Torque Tout [N·m]	[kgf·m]	Allowable Radial Load Pro [N]	[kgf]	SF	Input Capacity Symbol	–	Frame Size	– Reduction Ratio	CNHM CHHM	CNFM CHFM	CNVM CVVM
			9620	981	0.94				9810	1000	1.03	1H -		6125	- 87	B-101	B-117	B-136
			14700	**1500**	**1.29**				**14100**	**1430**	**1.29**	**1H -**		**6130**	**- 87**	**B-102**	**B-118**	**B-137**
16.7	599	61.0	14700	1500	1.50	20.1	496	50.6	14100	1430	1.74	1H -		6135	- 87	B-102	B-118	B-137
			16000	1630	1.80				16000	1630	1.80	1H -		6140	- 87	B-102	B-118	B-137
			16000	1630	1.96				16000	1630	2.25	1H -		6145	- 87	B-102	B-118	B-137
			22100	2250	2.93				22100	2250	3.15	1H -		6160	- 87	B-103	B-119	B-138
	525	53.5	9810	1000	*		525	53.5	9810	1000	*	1H -		6120DB	- 104	B-108	B-124	B-143
			9810	1000	0.93				9810	1000	1.12	1H -		6125DB	- 104	B-108	B-124	B-143
			14700	1500	1.15				14700	1500	1.39	1H -		6130DB	- 104	B-109	B-125	B-144
			14700	1500	1.39				14700	1500	1.39	1H -		6135DB	- 104	B-109	B-125	B-144
13.9	678	69.1	16000	1630	1.39	16.8	562	57.3	16000	1630	1.39	1H -		6140DB	- 104	B-109	B-125	B-144
			16000	1630	1.81				16000	1630	2.18	1H -		6140DC	- 104	B-109	B-125	B-144
			16000	1630	2.02				16000	1630	2.44	1H -		6145DC	- 104	B-109	B-125	B-144
			22100	2250	2.59				22100	2250	2.89	1H -		6160DB	- 104	B-110	B-126	B-145
			22100	2250	2.59				22100	2250	3.12	1H -		6160DC	- 104	B-111	B-127	B-146
	525	53.5	9810	1000	*		525	53.5	9810	1000	*	1H -		6120DB	- 121	B-108	B-124	B-143
	622	63.4	9810	1000	*		622	63.4	9810	1000	*	1H -		6125DB	- 121	B-108	B-124	B-143
			14700	1500	1.19				14700	1500	1.39	1H -		6135DB	- 121	B-109	B-125	B-144
			16000	1630	1.39				16000	1630	1.39	1H -		6140DB	- 121	B-109	B-125	B-144
12.0			16000	1630	1.55	14.5			16000	1630	1.87	1H -		6140DC	- 121	B-109	B-125	B-144
	789	80.4	16000	1630	1.64		654	66.6	16000	1630	1.98	1H -		6145DC	- 121	B-109	B-125	B-144
			22100	2250	2.22				22100	2250	2.68	1H -		6160DB	- 121	B-110	B-126	B-145
			22100	2250	2.66				22100	2250	2.89	1H -		6165DB	- 121	B-110	B-126	B-145
			22100	2250	2.66				22100	2250	3.21	1H -		6165DC	- 121	B-111	B-127	B-146
	630	64.2	9810	1000	*		630	64.2	9810	1000	*	1H -		6125DB	- 143	B-108	B-124	B-143
			14700	**1500**	**1.01**				**14700**	**1500**	**1.22**	**1H -**		**6135DB**	**- 143**	**B-109**	**B-125**	**B-144**
			16000	1630	1.31				16000	1630	1.39	1H -		6140DB	- 143	B-109	B-125	B-144
			16000	1630	1.31				16000	1630	1.59	1H -		6140DC	- 143	B-109	B-125	B-144
			16000	1630	1.39				16000	1630	1.39	1H -		6145DB	- 143	B-109	B-125	B-144
10.1	932	95.0	16000	1630	1.47	12.2	773	78.8	16000	1630	1.77	1H -		6145DC	- 143	B-109	B-125	B-144
			22100	2250	1.88				22100	2250	2.27	1H -		6160DB	- 143	B-110	B-126	B-145
			22100	2250	2.25				22100	2250	2.72	1H -		6165DB	- 143	B-110	B-126	B-145
			29500	3010	2.71				29500	3010	2.89	1H -		6170DB	- 143	B-110	B-126	B-145
			29500	3010	2.71				29500	3010	3.27	1H -		6170DC	- 143	B-111	B-127	B-146
	630	64.2	9810	1000	*		630	64.2	9810	1000	*	1H -		6125DB	- 165	B-108	B-124	B-143
	780	79.5	14700	1500	*		780	79.5	14700	1500	*	1H -		6130DB	- 165	B-109	B-125	B-144
			14700	1500	0.87				14700	1500	1.05	1H -		6135DB	- 165	B-109	B-125	B-144
			16000	1630	1.14				16000	1630	1.37	1H -		6140DB	- 165	B-109	B-125	B-144
			16000	1630	1.26				16000	1630	1.39	1H -		6145DB	- 165	B-109	B-125	B-144
			16000	1630	1.26				16000	1630	1.52	1H -		6145DC	- 165	B-109	B-125	B-144
8.79	1080	110	22100	2250	1.39	10.6	891	90.9	22100	2250	1.39	1H -		6160DA	- 165	B-110	B-126	B-145
			22100	2250	1.63				22100	2250	1.97	1H -		6160DB	- 165	B-110	B-126	B-145
			22100	2250	1.95				22100	2250	2.36	1H -		6165DB	- 165	B-110	B-126	B-145
			29500	3010	2.35				29500	3010	2.84	1H -		6170DB	- 165	B-110	B-126	B-145
			29500	3010	2.89				29500	3010	2.89	1H -		6175DB	- 165	B-110	B-126	B-145
			29500	3010	2.93				29500	3010	3.53	1H -		6175DC	- 165	B-111	B-127	B-146

1. Combinations in **bold** are the recommended models for operations for 10 hours/day with uniform load (service factor is about 1.0 for motor rating at 50Hz).
2. Motor slippage may affect n_1 and n_2. Refer to technical data for details.
3. CNHM, CHHM, CNFM, CHFM, CNVM, and CVVM indicate types. Refer to page B-10 for details.
4. Lubrication method is different for each model. Refer to "Lubrication" section in page F-4~F-5 for details.
5. "6" at the end of "input capacity symbol" indicates models with 6P motor. Other models come with 4P motor.

Selection Tables Gearmotors

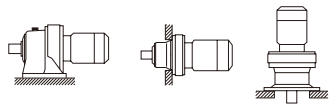

n_1: Motor Speed

1.1 kW	Hz	50Hz		60Hz	
	P	4	6	4	6
	n_1 r/min	1450	980	1750	1165

50Hz						60Hz						Nomenclature				Page of Dimension Sheet		
Output Speed n_2 [r/min]	Output Torque Tout [N·m]	[kgf·m]	Allowable Radial Load Pro [N]	[kgf]	SF	Output Speed n_2 [r/min]	Output Torque Tout [N·m]	[kgf·m]	Allowable Radial Load Pro [N]	[kgf]	SF	Input Capacity Symbol	Frame Size	Reduction Ratio		CNHM CHHM	CNFM CHFM	CNVM CVVM
	780	79.5	14700	1500	*		780	79.5	14700	1500	*	1H -	6130DB	- 195		B-109	B-125	B-144
	940	95.8	14700	1500	*		940	95.8	14700	1500	*	1H -	6135DB	- 195		B-109	B-125	B-144
			16000	**1630**	**1.07**				**16000**	**1630**	**1.29**	**1H -**	**6145DB**	**- 195**		**B-109**	**B-125**	**B-144**
			22100	2250	1.38				22100	2250	1.39	1H -	6160DA	- 195		B-110	B-126	B-145
7.44			22100	2250	1.38	8.97			22100	2250	1.67	1H -	6160DB	- 195		B-110	B-126	B-145
	1270	130	22100	2250	1.39		1050	107	22100	2250	1.39	1H -	6165DA	- 195		B-110	B-126	B-145
			22100	2250	1.65				22100	2250	1.99	1H -	6165DB	- 195		B-110	B-126	B-145
			29500	3010	1.99				29500	3010	2.40	1H -	6170DB	- 195		B-110	B-126	B-145
			29500	3010	2.48				29500	3010	2.89	1H -	6175DB	- 195		B-110	B-126	B-145
	940	95.8	14700	1500	*		940	95.8	14700	1500	*	1H -	6135DB	- 231		B-109	B-125	B-144
	1230	125	16000	1630	*		1230	125	16000	1630	*	1H -	6140DB	- 231		B-109	B-125	B-144
			15500	1580	0.89				16000	1630	1.07	1H -	6145DB	- 231		B-109	B-125	B-144
			22100	2250	1.17				22100	2250	1.39	1H -	6160DA	- 231		B-110	B-126	B-145
			22100	2250	1.39				22100	2250	1.39	1H -	6165DA	- 231		B-110	B-126	B-145
6.28			22100	2250	1.39	7.58			22100	2250	1.68	1H -	6165DB	- 231		B-110	B-126	B-145
	1510	154	29500	3010	1.39		1250	127	29500	3010	1.39	1H -	6170DA	- 231		B-110	B-126	B-145
			29500	3010	1.68				29500	3010	2.03	1H -	6170DB	- 231		B-110	B-126	B-145
			29500	3010	2.09				29500	3010	2.52	1H -	6175DB	- 231		B-110	B-126	B-145
			41700	4250	2.69				41700	4250	2.89	1H -	6180DA	- 231		B-110	B-126	B-145
			41700	4250	2.69				41700	4250	3.25	1H -	6180DB	- 231		B-111	B-127	B-146
	1230	125	16000	1630	*		1230	125	16000	1630	*	1H -	6140DB	- 273		B-109	B-125	B-144
	1340	136	16000	1630	*		1340	136	16000	1630	*	1H -	6145DB	- 273		B-109	B-125	B-144
			22100	2250	1.18				22100	2250	1.39	1H -	6165DA	- 273		B-110	B-126	B-145
			29500	3010	1.39				29500	3010	1.39	1H -	6170DA	- 273		B-110	B-126	B-145
			29500	3010	1.42				29500	3010	1.72	1H -	6170DB	- 273		B-110	B-126	B-145
5.31			29500	3010	1.39	6.41			29500	3010	1.39	1H -	6175DA	- 273		B-110	B-126	B-145
	1780	181	29500	3010	1.77		1470	150	29500	3010	2.14	1H -	6175DB	- 273		B-110	B-126	B-145
			41700	4250	2.28				41700	4250	2.75	1H -	6180DA	- 273		B-110	B-126	B-145
			41700	4250	2.81				41700	4250	2.89	1H -	6185DA	- 273		B-110	B-126	B-145
			41700	4250	2.81				41700	4250	3.39	1H -	6185DB	- 273		B-111	B-127	B-146
	1230	125	16000	1630	*		1230	125	16000	1630	*	1H -	6140DB	- 319		B-109	B-125	B-144
	1370	140	15800	1610	*		1370	140	15800	1610	*	1H -	6145DB	- 319		B-109	B-125	B-144
			22100	**2250**	**1.01**				**22100**	**2250**	**1.22**	**1H -**	**6165DA**	**- 319**		**B-110**	**B-126**	**B-145**
			29500	3010	1.22				29500	3010	1.39	1H -	6170DA	- 319		B-110	B-126	B-145
4.55			29500	3010	1.22	5.49			29500	3010	1.47	1H -	6170DB	- 319		B-110	B-126	B-145
	2080	212	29500	3010	1.39		1720	176	29500	3010	1.39	1H -	6175DA	- 319		B-110	B-126	B-145
			29500	3010	1.51				29500	3010	1.83	1H -	6175DB	- 319		B-110	B-126	B-145
			41700	4250	1.95				41700	4250	2.35	1H -	6180DA	- 319		B-110	B-126	B-145
			41700	4250	2.40				41700	4250	2.89	1H -	6185DA	- 319		B-110	B-126	B-145
	1760	179	22100	2250	*		1760	179	22100	2250	*	1H -	6160DA	- 377		B-110	B-126	B-145
			22100	2250	0.85				22100	2250	1.03	1H -	6165DA	- 377		B-110	B-126	B-145
			29500	**3010**	**1.03**				**29500**	**3010**	**1.24**	**1H -**	**6170DA**	**- 377**		**B-110**	**B-126**	**B-145**
			29500	3010	1.28				29500	3010	1.39	1H -	6175DA	- 377		B-110	B-126	B-145
3.85	2460	251	29500	3010	1.28	4.64	2040	208	29500	3010	1.55	1H -	6175DB	- 377		B-110	B-126	B-145
			41700	4250	1.65				41700	4250	1.99	1H -	6180DA	- 377		B-110	B-126	B-145
			41700	4250	2.03				41700	4250	2.45	1H -	6185DA	- 377		B-110	B-126	B-145
			59000	6010	2.60				59000	6010	3.13	1H -	6190DA	- 377		B-111	B-128	B-147

6. "☆" indicates models manufactured with reducer and motor separately mounted on a common baseplate (horizontal shaft direction) or on an adaptor (vertical shaft direction). Consult us for details, including dimensions.
7. Allowable radial load (Pro) is the value at the midpoint of the slow speed shaft.
8. "(K)" indicates models with reduction ratios equal to nominal ratio. Refer to Table A-3 "6000SK Series (Actual Reduction Ratio)" on page A-4 for actual reduction ratio. Indicated reduction ratio is the same as actual reduction ratio for other models.
9. Maintain torque load during operation within "Output torque" in the table for models with "*" in the SF column. They cannot be operated with 100% motor rating.

Selection Tables Gearmotors

n_1: Motor Speed

1.1 kW	Hz	50Hz		60Hz	
	P	4	6	4	6
	n_1 r/min	1450	980	1750	1165

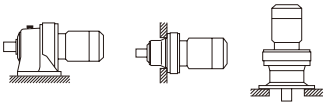

CHHM/CNHM CHFM/CNFM CVVM/CNVM

50Hz						60Hz						Nomenclature	Page of Dimension Sheet		
Output Speed n_2 [r/min]	Output Torque Tout [N·m]	[kgf·m]	Allowable Radial Load Pro [N]	[kgf]	SF	Output Speed n_2 [r/min]	Output Torque Tout [N·m]	[kgf·m]	Allowable Radial Load Pro [N]	[kgf]	SF	Input Capacity Symbol - Frame Size - Reduction Ratio	CNHM CHHM	CNFM CHFM	CNVM CVVM
	2100	214	22100	2250	*		2100	214	22100	2250	*	1H - 6165DA - 473	B-110	B-126	B-145
	2530	258	29500	3010	*		2530	258	29500	3010	*	1H - 6170DA - 473	B-110	B-126	B-145
			29500	**3010**	**1.02**				**29500**	**3010**	**1.23**	**1H - 6175DA - 473**	**B-110**	**B-126**	**B-145**
3.07			41700	4250	1.32	3.70			41700	4250	1.59	1H - 6180DA - 473	B-110	B-126	B-145
	3080	314	41700	4250	1.62		2560	260	41700	4250	1.96	1H - 6185DA - 473	B-110	B-126	B-145
			59000	6010	2.07				59000	6010	2.50	1H - 6190DA - 473	B-111	B-128	B-147
			59000	6010	2.58				59000	6010	3.11	1H - 6195DA - 473	B-111	B-128	B-147
	2100	214	22100	2250	*		2100	214	22100	2250	*	1H - 6165DA - 559	B-110	B-126	B-145
	2530	258	29500	3010	*		2530	258	29500	3010	*	1H - 6170DA - 559	B-110	B-126	B-145
			29500	3010	0.86				29500	3010	1.04	1H - 6175DA - 559	B-110	B-126	B-145
2.59			41700	4250	1.11	3.13			41700	4250	1.34	1H - 6180DA - 559	B-110	B-126	B-145
	3640	372	41700	4250	1.37		3020	308	41700	4250	1.66	1H - 6185DA - 559	B-110	B-126	B-145
			59000	6010	1.75				59000	6010	2.11	1H - 6190DA - 559	B-111	B-128	B-147
			59000	6010	2.18				59000	6010	2.64	1H - 6195DA - 559	B-111	B-128	B-147
	2530	258	29500	3010	*		2530	258	29500	3010	*	1H - 6170DA - 649	B-110	B-126	B-145
	3150	321	29500	3010	*		3150	321	29500	3010	*	1H - 6175DA - 649	B-110	B-126	B-145
2.23			41700	4250	1.18	2.70			41700	4250	1.43	1H - 6185DA - 649	B-110	B-126	B-145
	4230	431	59000	6010	1.51		3510	357	59000	6010	1.82	1H - 6190DA - 649	B-111	B-128	B-147
			59000	6010	1.88				59000	6010	2.27	1H - 6195DA - 649	B-111	B-128	B-147
	3150	321	29500	3010	*		3150	321	29500	3010	*	1H - 6175DA - 731	B-110	B-126	B-145
1.98			**41700**	**4250**	**1.05**	2.39			**41700**	**4250**	**1.27**	**1H - 6185DA - 731**	**B-110**	**B-126**	**B-145**
	4770	486	59000	6010	1.34		3950	403	59000	6010	1.62	1H - 6190DA - 731	B-111	B-128	B-147
			59000	6010	1.67				59000	6010	2.02	1H - 6195DA - 731	B-111	B-128	B-147
	3150	321	29500	3010	*		3150	321	29500	3010	*	1H - 6175DA - 841	B-110	B-126	B-145
	4050	413	41700	4250	*		4050	413	41700	4250	*	1H - 6180DA - 841	B-110	B-126	B-145
1.72			41700	4250	0.91	2.08			41700	4250	1.10	1H - 6185DA - 841	B-110	B-126	B-145
	5480	559	59000	6010	1.16		4540	463	59000	6010	1.40	1H - 6190DA - 841	B-111	B-128	B-147
			59000	6010	1.45				59000	6010	1.75	1H - 6195DA - 841	B-111	B-128	B-147
	4050	413	41700	4250	*		4050	413	41700	4250	*	1H - 6180DA - 1003	B-110	B-126	B-145
1.45	5000	510	41600	4240	*	1.74	5000	510	41600	4240	*	1H - 6185DA - 1003	B-110	B-126	B-145
	6540	667	58500	5970	1.22		5420	552	58800	6000	1.47	1H - 6195DA - 1003	B-111	B-128	B-147
	5000	510	41700	4250	*		5000	510	41700	4250	*	1H - 6185DA - 1247	B-110	B-126	B-145
1.16	6380	650	59000	6010	*	1.40	6380	650	59000	6010	*	1H - 6190DA - 1247	B-111	B-128	B-147
	8130	829	58900	6010	0.98		6740	687	59000	6010	1.18	1H - 6195DA - 1247	B-111	B-128	B-147
	6380	650	58900	6000	*		6380	650	58900	6000	*	1H - 6190DA - 1479	B-111	B-128	B-147
0.980	7960	811	58400	5950	*	1.18	7960	811	58400	5950	*	1H - 6195DA - 1479	B-111	B-128	B-147
	9640	983	57800	5900	0.83		7990	815	58400	5950	1.00	1H - 6195DA - 1479	B-111	B-128	B-147
0.784	7960	811	59000	6010	*	0.946	7960	811	59000	6010	*	1H - 6195DA - 1849	B-111	B-128	B-147
0.702	7960	811	58100	5930	*	0.847	7960	811	58100	5930	*	1H - 6195DA - 2065	B-111	B-128	B-147

1. Combinations in **bold** are the recommended models for operations for 10 hours/day with uniform load (service factor is about 1.0 for motor rating at 50Hz).
2. Motor slippage may affect n_1 and n_2. Refer to technical data for details.
3. CNHM, CHHM, CNFM, CHFM, CNVM, and CVVM indicate types. Refer to page B-10 for details.
4. Lubrication method is different for each model. Refer to "Lubrication" section in page F-4~F-5 for details.
5. "6" at the end of "input capacity symbol" indicates models with 6P motor. Other models come with 4P motor.

Selection Tables Gearmotors

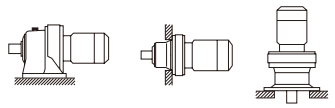

n_1: Motor Speed

1.5 kW	Hz	50Hz		60Hz	
	P	4	6	4	6
	n_1 r/min	1450	980	1750	1165

50Hz						60Hz						Nomenclature	Page of Dimension Sheet		
Output Speed n_2 [r/min]	Output Torque Tout [N·m]	[kgf·m]	Allowable Radial Load Pro [N]	[kgf]	SF	Output Speed n_2 [r/min]	Output Torque Tout [N·m]	[kgf·m]	Allowable Radial Load Pro [N]	[kgf]	SF	Input Capacity - Symbol Frame Size - Reduction Ratio	CNHM CHHM	CNFM CHFM	CNVM CVVM
			1130	**115**	**1.10**				**1090**	**111**	**1.10**	**2 - 6080SK - 2.5 (K)**	**B-98**	**-**	**B-133**
			1130	115	1.37				1090	111	1.37	2 - 6085SK - 2.5 (K)	B-98	-	B-133
			2140	218	1.60				2050	209	1.60	2 - 6090SK - 2.5 (K)	B-98	-	B-133
580	23.5	2.39	2140	218	1.81	700	19.4	1.98	2050	209	1.81	2 - 6095SK - 2.5 (K)	B-98	-	B-133
			2140	218	2.12				2050	209	2.12	2 - 6100SK - 2.5 (K)	B-99	-	B-134
			2140	218	2.50				2050	209	2.50	2 - 6105SK - 2.5 (K)	B-99	-	B-134
			2860	292	3.43				2710	276	3.43	2 - 6110SK - 2.5 (K)	B-99	-	B-134
			1170	**119**	**1.10**				**1130**	**115**	**1.10**	**2 - 6080SK - 3 (K)**	**B-98**	**-**	**B-133**
			1170	119	1.37				1130	115	1.37	2 - 6085SK - 3 (K)	B-98	-	B-133
			2230	227	1.56				2120	216	1.56	2 - 6090SK - 3 (K)	B-98	-	B-133
483	28.2	2.87	2230	227	1.75	583	23.3	2.38	2120	216	1.75	2 - 6095SK - 3 (K)	B-98	-	B-133
			2230	227	2.20				2120	216	2.20	2 - 6100SK - 3 (K)	B-99	-	B-134
			2230	227	2.59				2120	216	2.59	2 - 6105SK - 3 (K)	B-99	-	B-134
			3060	312	3.52				2890	295	3.52	2 - 6110SK - 3 (K)	B-99	-	B-134
			1250	**127**	**1.10**				**1210**	**123**	**1.10**	**2 - 6080SK - 4 (K)**	**B-98**	**-**	**B-133**
			1250	127	1.37				1210	123	1.37	2 - 6085SK - 4 (K)	B-98	-	B-133
			2470	252	1.56				2370	242	1.56	2 - 6090SK - 4 (K)	B-98	-	B-133
363	37.5	3.83	2470	252	1.75	438	31.1	3.17	2370	242	1.75	2 - 6095SK - 4 (K)	B-98	-	B-133
			2470	252	2.15				2370	242	2.15	2 - 6100SK - 4 (K)	B-99	-	B-134
			2470	252	2.53				2370	242	2.53	2 - 6105SK - 4 (K)	B-99	-	B-134
			3280	334	3.57				3100	316	3.57	2 - 6110SK - 4 (K)	B-99	-	B-134
			1290	**132**	**1.21**				**1270**	**129**	**1.21**	**2 - 6085SK - 5 (K)**	**B-98**	**-**	**B-133**
			2590	264	1.49				2490	254	1.49	2 - 6090SK - 5 (K)	B-98	-	B-133
290	46.9	4.78	2590	264	1.75	350	38.9	3.96	2490	254	1.75	2 - 6095SK - 5 (K)	B-98	-	B-133
			2590	264	2.10				2490	254	2.10	2 - 6100SK - 5 (K)	B-99	-	B-134
			2590	264	2.47				2490	254	2.47	2 - 6105SK - 5 (K)	B-99	-	B-134
			3460	353	3.07				3290	335	3.07	2 - 6110SK - 5 (K)	B-99	-	B-134
			1290	**132**	**1.08**				**1290**	**131**	**1.08**	**2 - 6085SK - 6 (K)**	**B-98**	**-**	**B-133**
			2660	271	1.27				2530	258	1.27	2 - 6090SK - 6 (K)	B-98	-	B-133
			2660	271	1.51				2530	258	1.51	2 - 6095SK - 6 (K)	B-98	-	B-133
			2660	271	1.78				2530	258	1.78	2 - 6100SK - 6 (K)	B-99	-	B-134
			2660	271	2.09				2530	258	2.09	2 - 6105SK - 6 (K)	B-99	-	B-134
242	56.3	5.74	3700	377	2.82	292	46.7	4.76	3510	358	2.82	2 - 6110SK - 6 (K)	B-99	-	B-134
			2790	284	1.01				2630	268	1.01	2 - 6095 - 6	B-100	B-116	B-135
			4130	421	1.57				3880	396	1.57	2 - 6100 - 6	B-101	B-117	B-136
			4130	421	2.12				3880	396	2.12	2 - 6105 - 6	B-101	B-117	B-136
			4670	476	2.37				4390	447	2.37	2 - 6110 - 6	B-101	B-117	B-136
			4670	476	2.61				4390	447	2.61	2 - 6115 - 6	B-101	B-117	B-136
			1290	132	0.91				1290	132	0.91	2 - 6085SK - 8 (K)	B-98	-	B-133
			2870	**293**	**1.00**				**2780**	**283**	**1.00**	**2 - 6090SK - 8 (K)**	**B-98**	**-**	**B-133**
			2870	293	1.18				2780	283	1.18	2 - 6095SK - 8 (K)	B-98	-	B-133
			2870	293	1.41				2780	283	1.41	2 - 6100SK - 8 (K)	B-99	-	B-134
			2870	293	1.66				2780	283	1.66	2 - 6105SK - 8 (K)	B-99	-	B-134
			3950	403	2.47				3770	384	2.47	2 - 6110SK - 8 (K)	B-99	-	B-134
181	75.1	7.65	3950	403	3.09	219	62.2	6.34	3770	384	3.09	2 - 6115SK - 8 (K)	B-99	-	B-134
			3090	315	1.01				2920	297	1.01	2 - 6095 - 8	B-100	B-116	B-135
			4600	469	1.57				4330	441	1.57	2 - 6100 - 8	B-101	B-117	B-136
			4600	469	2.12				4330	441	2.12	2 - 6105 - 8	B-101	B-117	B-136
			5210	531	2.37				4900	499	2.37	2 - 6110 - 8	B-101	B-117	B-136
			5210	531	2.61				4900	499	2.61	2 - 6115 - 8	B-101	B-117	B-136
			2990	**305**	**1.18**				**2900**	**296**	**1.18**	**2 - 6095SK - 10 (K)**	**B-98**	**-**	**B-133**
			2990	305	1.32				2900	296	1.32	2 - 6100SK - 10 (K)	B-99	-	B-134
145	93.9	9.57	2990	305	1.47	175	77.8	7.93	2900	296	1.47	2 - 6105SK - 10 (K)	B-99	-	B-134
			4250	433	2.04				4050	413	2.04	2 - 6110SK - 10 (K)	B-99	-	B-134
			4250	433	2.55				4050	413	2.55	2 - 6115SK - 10 (K)	B-99	-	B-134

6. "☆" indicates models manufactured with reducer and motor separately mounted on a common baseplate (horizontal shaft direction) or on an adaptor (vertical shaft direction). Consult us for details, including dimensions.
7. Allowable radial load (Pro) is the value at the midpoint of the slow speed shaft.
8. "(K)" indicates models with reduction ratios equal to nominal ratio. Refer to Table A-3 "6000SK Series (Actual Reduction Ratio)" on page A-4 for actual reduction ratio. Indicated reduction ratio is the same as actual reduction ratio for other models.
9. Maintain torque load during operation within "Output torque" in the table for models with "*" in the SF column. They cannot be operated with 100% motor rating.

Selection Tables Gearmotors

n_1: Motor Speed

1.5 kW	Hz	50Hz		60Hz	
	P	4	6	4	6
	n_1 r/min	1450	980	1750	1165

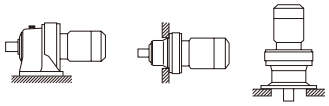

CHHM/CNHM CHFM/CNFM CVVM/CNVM

50Hz						60Hz						Nomenclature				Page of Dimension Sheet		
Output Speed n_2 [r/min]	Output Torque Tout [N·m]	[kgf·m]	Allowable Radial Load Pro [N]	[kgf]	SF	Output Speed n_2 [r/min]	Output Torque Tout [N·m]	[kgf·m]	Allowable Radial Load Pro [N]	[kgf]	SF	Input Capacity	- Symbol Frame Size	- Reduction Ratio		CNHM CHHM	CNFM CHFM	CNVM CVVM
			3340	**340**	**1.01**				**3300**	**336**	**1.01**	**2**	**-**	**6095**	**- 11**	**B-100**	**B-116**	**B-135**
			5220	532	1.57				4920	501	1.57	2	-	6100	- 11	B-101	B-117	B-136
132	103	10.5	5220	532	2.12	159	85.5	8.72	4920	501	2.12	2	-	6105	- 11	B-101	B-117	B-136
			5950	606	2.37				5600	571	2.37	2	-	6110	- 11	B-101	B-117	B-136
			5950	606	2.61				5600	571	2.61	2	-	6115	- 11	B-101	B-117	B-136
			3340	**340**	**1.01**				**3300**	**336**	**1.01**	**2**	**-**	**6095**	**- 13**	**B-100**	**B-116**	**B-135**
			5400	550	1.57				5110	521	1.57	2	-	6100	- 13	B-101	B-117	B-136
112	122	12.4	5400	550	2.12	135	101	10.3	5110	521	2.12	2	-	6105	- 13	B-101	B-117	B-136
			6150	627	2.37				5790	591	2.37	2	-	6110	- 13	B-101	B-117	B-136
			6150	627	2.60				5790	591	2.60	2	-	6115	- 13	B-101	B-117	B-136
			3340	**340**	**1.01**				**3280**	**335**	**1.01**	**2**	**-**	**6095**	**- 15**	**B-100**	**B-116**	**B-135**
			5400	550	1.57				5400	550	1.57	2	-	6100	- 15	B-101	B-117	B-136
96.7	141	14.4	5400	550	2.12	117	117	11.9	5400	550	2.12	2	-	6105	- 15	B-101	B-117	B-136
			6560	669	2.37				6180	630	2.37	2	-	6110	- 15	B-101	B-117	B-136
			6560	669	2.60				6180	630	2.60	2	-	6115	- 15	B-101	B-117	B-136
			3340	**340**	**1.01**				**3290**	**336**	**1.01**	**2**	**-**	**6095**	**- 17**	**B-100**	**B-116**	**B-135**
			5400	550	1.33				5400	550	1.33	2	-	6100	- 17	B-101	B-117	B-136
85.3	160	16.3	5400	550	1.64	103	132	13.5	5400	550	1.64	2	-	6105	- 17	B-101	B-117	B-136
			6620	675	2.12				6240	636	2.12	2	-	6110	- 17	B-101	B-117	B-136
			6620	675	2.60				6240	636	2.60	2	-	6115	- 17	B-101	B-117	B-136
			3340	**340**	**1.01**				**3260**	**332**	**1.01**	**2**	**-**	**6095**	**- 21**	**B-100**	**B-116**	**B-135**
			5400	550	1.27				5400	550	1.29	2	-	6100	- 21	B-101	B-117	B-136
69.0	197	20.1	5400	550	1.52	83.3	163	16.6	5400	550	1.56	2	-	6105	- 21	B-101	B-117	B-136
			7020	716	1.81				6620	675	1.81	2	-	6110	- 21	B-101	B-117	B-136
			7020	716	2.07				6620	675	2.07	2	-	6115	- 21	B-101	B-117	B-136
			8260	842	2.64				7780	793	2.64	2	-	6120	- 21	B-101	B-117	B-136
			5400	**550**	**1.11**				**5400**	**550**	**1.11**	**2**	**-**	**6105**	**- 25**	**B-101**	**B-117**	**B-136**
			7120	726	1.27				6720	685	1.27	2	-	6110	- 25	B-101	B-117	B-136
58.0	235	23.9	7120	726	1.48	70.0	194	19.8	6720	685	1.48	2	-	6115	- 25	B-101	B-117	B-136
			8650	882	2.06				8150	831	2.06	2	-	6120	- 25	B-101	B-117	B-136
			8650	882	2.64				8150	831	2.64	2	-	6125	- 25	B-101	B-117	B-136
			5400	**550**	**1.06**				**5400**	**550**	**1.06**	**2**	**-**	**6105**	**- 29**	**B-101**	**B-117**	**B-136**
			7290	743	1.27				6900	703	1.27	2	-	6110	- 29	B-101	B-117	B-136
50.0	272	27.7	7290	743	1.48	60.3	226	23.0	6900	703	1.48	2	-	6115	- 29	B-101	B-117	B-136
			8990	916	1.91				8470	863	1.99	2	-	6120	- 29	B-101	B-117	B-136
			8990	916	2.31				8470	863	2.51	2	-	6125	- 29	B-101	B-117	B-136
			10500	1070	2.87				9920	1010	2.99	2	-	6130	- 29	B-102	B-118	B-137
			4820	491	0.80				5330	544	0.80	2	-	6105	- 35	B-101	B-117	B-136
			7310	**745**	**1.00**				**7360**	**751**	**1.00**	**2**	**-**	**6110**	**- 35**	**B-101**	**B-117**	**B-136**
			7310	745	1.21				7360	751	1.21	2	-	6115	- 35	B-101	B-117	B-136
41.4	328	33.5	9490	967	1.58	50.0	272	27.7	8940	912	1.66	2	-	6120	- 35	B-101	B-117	B-136
			9490	967	1.92				8940	912	2.12	2	-	6125	- 35	B-101	B-117	B-136
			11100	1130	2.37				10400	1060	2.47	2	-	6130	- 35	B-102	B-118	B-137
			11100	1130	2.74				10400	1060	2.83	2	-	6135	- 35	B-102	B-118	B-137
			7540	**769**	**1.01**				**7610**	**776**	**1.01**	**2**	**-**	**6115**	**- 43**	**B-101**	**B-117**	**B-136**
			9810	1000	1.27				9510	969	1.27	2	-	6120	- 43	B-101	B-117	B-136
33.7	404	41.1	9810	1000	1.56	40.7	334	34.1	9510	969	1.59	2	-	6125	- 43	B-101	B-117	B-136
			11900	1210	1.93				11200	1140	1.99	2	-	6130	- 43	B-102	B-118	B-137
			11900	1210	2.23				11200	1140	2.51	2	-	6135	- 43	B-102	B-118	B-137
			16000	1630	2.63				15900	1620	2.63	2	-	6140	- 43	B-102	B-118	B-137
			9810	**1000**	**1.09**				**9810**	**1000**	**1.15**	**2**	**-**	**6120**	**- 51**	**B-101**	**B-117**	**B-136**
			9810	1000	1.31				9810	1000	1.52	2	-	6125	- 51	B-101	B-117	B-136
28.4	479	48.8	12400	1260	1.63	34.3	397	40.4	11700	1190	1.69	2	-	6130	- 51	B-102	B-118	B-137
			12400	1260	1.70				11700	1190	1.95	2	-	6135	- 51	B-102	B-118	B-137
			16000	1630	2.29				16000	1630	2.29	2	-	6140	- 51	B-102	B-118	B-137
			16000	1630	2.47				16000	1630	2.81	2	-	6145	- 51	B-102	B-118	B-137

1. Combinations in **bold** are the recommended models for operations for 10 hours/day with uniform load (service factor is about 1.0 for motor rating at 50Hz).
2. Motor slippage may affect n_1 and n_2. Refer to technical data for details.
3. CNHM, CHHM, CNFM, CHFM, CNVM, and CVVM indicate types. Refer to page B-10 for details.
4. Lubrication method is different for each model. Refer to "Lubrication" section in page F-4~F-5 for details.
5. "6" at the end of "input capacity symbol" indicates models with 6P motor. Other models come with 4P motor.

Selection Tables Gearmotors

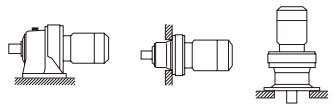

CHHM/CNHM CHFM/CNFM CVVM/CNVM

n_1: Motor Speed

1.5 kW	Hz	50Hz		60Hz	
	P	4	6	4	6
	n_1 r/min	1450	980	1750	1165

50Hz						60Hz						Nomenclature				Page of Dimension Sheet		
Output Speed n_2 [r/min]	Output Torque Tout [N·m]	[kgf·m]	Allowable Radial Load Pro [N]	[kgf]	SF	Output Speed n_2 [r/min]	Output Torque Tout [N·m]	[kgf·m]	Allowable Radial Load Pro [N]	[kgf]	SF	Input Capacity	Symbol Frame Size	Reduction Ratio		CNHM CHHM	CNFM CHFM	CNVM CVVM
			9810	**1000**	**1.08**				**9810**	**1000**	**1.08**	**2**	**6125**	**59**		**B-101**	**B-117**	**B-136**
			13000	1320	1.41				12200	1250	1.46	2	6130	59		B-102	B-118	B-137
24.6	554	56.4	13000	1320	1.63	29.7	459	46.8	12200	1250	1.68	2	6135	59		B-102	B-118	B-137
			16000	1630	1.97				16000	1630	1.97	2	6140	59		B-102	B-118	B-137
			16000	1630	2.12				16000	1630	2.43	2	6145	59		B-102	B-118	B-137
			22100	2250	2.95				22100	2250	2.95	2	6160	59		B-103	B-119	B-138
			13700	**1400**	**1.17**				**12900**	**1320**	**1.22**	**2**	**6130**	**71**		**B-102**	**B-118**	**B-137**
			13700	1400	1.35				12900	1320	1.45	2	6135	71		B-102	B-118	B-137
20.4	666	67.9	16000	1630	1.62	24.6	552	56.3	16000	1630	1.62	2	6140	71		B-102	B-118	B-137
			16000	1630	1.75				16000	1630	2.02	2	6145	71		B-102	B-118	B-137
			22100	2250	2.31				22100	2250	2.31	2	6160	71		B-103	B-119	B-138
			14700	**1500**	**1.10**				**13900**	**1420**	**1.27**	**2**	**6135**	**87**		**B-102**	**B-118**	**B-137**
			16000	1630	1.32				16000	1630	1.32	2	6140	87		B-102	B-118	B-137
16.7	817	83.2	16000	1630	1.44	20.1	677	69.0	16000	1630	1.65	2	6145	87		B-102	B-118	B-137
			22100	2250	2.15				22100	2250	2.31	2	6160	87		B-103	B-119	B-138
			22100	2250	2.51				22100	2250	2.60	2	6165	87		B-103	B-119	B-138
	630	64.2	9810	1000	*		630	64.2	9810	1000	*	2	6125DB	104		B-108	B-124	B-143
			14700	**1500**	**1.02**				**14700**	**1500**	**1.02**	**2**	**6135DB**	**104**		**B-109**	**B-125**	**B-144**
			14700	1500	1.02				14700	1500	1.23	2	6135DC	104		B-109	B-125	B-144
			16000	1630	1.02				16000	1630	1.02	2	6140DB	104		B-109	B-125	B-144
			16000	1630	1.32				16000	1630	1.60	2	6140DC	104		B-109	B-125	B-144
13.9	925	94.3	16000	1630	1.48	16.8	766	78.1	16000	1630	1.79	2	6145DC	104		B-109	B-125	B-144
			22100	2250	1.90				22100	2250	2.12	2	6160DB	104		B-110	B-126	B-145
			22100	2250	1.90				22100	2250	2.29	2	6160DC	104		B-111	B-127	B-146
			22100	2250	2.12				22100	2250	2.12	2	6165DB	104		B-110	B-126	B-145
			22100	2250	2.27				22100	2250	2.74	2	6165DC	104		B-111	B-127	B-146
			29500	3010	2.73				29500	3010	3.30	2	6170DC	104		B-111	B-127	B-146
	780	79.5	14700	1500	*		780	79.5	14700	1500	*	2	6130DB	121		B-109	B-125	B-144
			14700	1500	0.87				14700	1500	1.02	2	6135DB	121		B-109	B-125	B-144
			16000	**1630**	**1.02**				**16000**	**1630**	**1.02**	**2**	**6140DB**	**121**		**B-109**	**B-125**	**B-144**
			16000	1630	1.14				16000	1630	1.37	2	6140DC	121		B-109	B-125	B-144
			16000	1630	1.20				16000	1630	1.45	2	6145DC	121		B-109	B-125	B-144
12.0	1080	110	22100	2250	1.63	14.5	891	90.9	22100	2250	1.97	2	6160DB	121		B-110	B-126	B-145
			22100	2250	1.95				22100	2250	2.12	2	6165DB	121		B-110	B-126	B-145
			22100	2250	1.95				22100	2250	2.36	2	6165DC	121		B-111	B-127	B-146
			29500	3010	2.12				29500	3010	2.12	2	6170DB	121		B-110	B-126	B-145
			29500	3010	2.35				29500	3010	2.84	2	6170DC	121		B-111	B-127	B-146
			29500	3010	2.93				29500	3010	3.53	2	6175DC	121		B-111	B-127	B-146
	780	79.5	14700	1500	*		780	79.5	14700	1500	*	2	6130DB	143		B-109	B-125	B-144
	940	95.8	14700	1500	*		940	95.8	14700	1500	*	2	6135DB	143		B-109	B-125	B-144
			16000	**1630**	**1.02**				**16000**	**1630**	**1.02**	**2**	**6145DB**	**143**		**B-109**	**B-125**	**B-144**
			16000	1630	1.08				16000	1630	1.30	2	6145DC	143		B-109	B-125	B-144
10.1			22100	2250	1.38	12.2			22100	2250	1.67	2	6160DB	143		B-110	B-126	B-145
	1270	130	22100	2250	1.65		1050	107	22100	2250	1.99	2	6165DB	143		B-110	B-126	B-145
			29500	3010	1.99				29500	3010	2.12	2	6170DB	143		B-110	B-126	B-145
			29500	3010	1.99				29500	3010	2.40	2	6170DC	143		B-111	B-127	B-146
			29500	3010	2.12				29500	3010	2.12	2	6175DB	143		B-110	B-126	B-145
			29500	3010	2.48				29500	3010	2.99	2	6175DC	143		B-111	B-127	B-146

6. "☆" indicates models manufactured with reducer and motor separately mounted on a common baseplate (horizontal shaft direction) or on an adaptor (vertical shaft direction). Consult us for details, including dimensions.
7. Allowable radial load (Pro) is the value at the midpoint of the slow speed shaft.
8. "(K)" indicates models with reduction ratios equal to nominal ratio. Refer to Table A-3 "6000SK Series (Actual Reduction Ratio)" on page A-4 for actual reduction ratio. Indicated reduction ratio is the same as actual reduction ratio for other models.
9. Maintain torque load during operation within "Output torque" in the table for models with "*" in the SF column. They cannot be operated with 100% motor rating.

Selection Tables Gearmotors

n_1: Motor Speed

1.5 kW	Hz	50Hz		60Hz	
	P	4	6	4	6
	n_1 r/min	1450	980	1750	1165

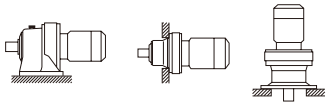

CHHM/CNHM CHFM/CNFM CVVM/CNVM

50Hz						60Hz						Nomenclature	Page of Dimension Sheet		
Output Speed n_2 [r/min]	Output Torque Tout [N·m]	[kgf·m]	Allowable Radial Load Pro [N]	[kgf]	SF	Output Speed n_2 [r/min]	Output Torque Tout [N·m]	[kgf·m]	Allowable Radial Load Pro [N]	[kgf]	SF	Input Capacity - Symbol Frame Size - Reduction Ratio	CNHM CHHM	CNFM CHFM	CNVM CVVM
8.79	940	95.8	14700	1500	*	10.6	940	95.8	14700	1500	*	2 - 6135DB - 165	B-109	B-125	B-144
	1470	150	15500	1580	0.93		1220	124	16000	1630	1.02	2 - 6145DB - 165	B-109	B-125	B-144
			15500	1580	0.93				16000	1630	1.12	2 - 6145DC - 165	B-109	B-125	B-144
			22100	**2250**	**1.02**				**22100**	**2250**	**1.02**	**2 - 6160DA - 165**	**B-110**	**B-126**	**B-145**
			22100	2250	1.20				22100	2250	1.44	2 - 6160DB - 165	B-110	B-126	B-145
			22100	2250	1.43				22100	2250	1.73	2 - 6165DB - 165	B-110	B-126	B-145
			29500	3010	1.72				29500	3010	2.08	2 - 6170DB - 165	B-110	B-126	B-145
			29500	3010	2.12				29500	3010	2.12	2 - 6175DB - 165	B-110	B-126	B-145
			41700	4250	2.12				41700	4250	2.12	2 - 6180DA - 165	B-110	B-126	B-145
			41700	4250	2.77				41700	4250	3.34	2 - 6180DB - 165	B-111	B-127	B-146
7.44	1230	125	16000	1630	*	8.97	1230	125	16000	1630	*	2 - 6140DB - 195	B-109	B-125	B-144
	1360	138	16000	1630	*		1360	138	16000	1630	*	2 - 6145DB - 195	B-109	B-125	B-144
	1730	177	**22100**	**2250**	**1.01**		1440	146	**22100**	**2250**	**1.02**	**2 - 6160DA - 195**	**B-110**	**B-126**	**B-145**
			22100	2250	1.01				22100	2250	1.22	2 - 6160DB - 195	B-110	B-126	B-145
			22100	2250	1.01				22100	2250	1.02	2 - 6165DA - 195	B-110	B-126	B-145
			22100	2250	1.21				22100	2250	1.46	2 - 6165DB - 195	B-110	B-126	B-145
			29500	3010	1.46				29500	3010	1.76	2 - 6170DB - 195	B-110	B-126	B-145
			29500	3010	1.82				29500	3010	2.12	2 - 6175DB - 195	B-110	B-126	B-145
			41700	4250	2.12				41700	4250	2.12	2 - 6180DA - 195	B-110	B-126	B-145
			41700	4250	2.34				41700	4250	2.83	2 - 6180DB - 195	B-111	B-127	B-146
			41700	4250	2.84				41700	4250	3.43	2 - 6185DB - 195	B-111	B-127	B-146
6.28	1340	136	16000	1630	*	7.58	1340	136	16000	1630	*	2 - 6145DB - 231	B-109	B-125	B-144
	2050	209	**22100**	**2250**	**1.02**		1700	173	**22100**	**2250**	**1.02**	**2 - 6165DA - 231**	**B-110**	**B-126**	**B-145**
			22100	2250	1.02				22100	2250	1.23	2 - 6165DB - 231	B-110	B-126	B-145
			29500	3010	1.02				29500	3010	1.02	2 - 6170DA - 231	B-110	B-126	B-145
			29500	3010	1.23				29500	3010	1.49	2 - 6170DB - 231	B-110	B-126	B-145
			29500	3010	1.53				29500	3010	1.85	2 - 6175DB - 231	B-110	B-126	B-145
			41700	4250	1.97				41700	4250	2.12	2 - 6180DA - 231	B-110	B-126	B-145
			41700	4250	1.97				41700	4250	2.38	2 - 6180DB - 231	B-111	B-127	B-146
			41700	4250	2.12				41700	4250	2.12	2 - 6185DA - 231	B-110	B-126	B-145
			41700	4250	2.43				41700	4250	2.94	2 - 6185DB - 231	B-111	B-127	B-146
5.31	1760	179	22100	2250	*	6.41	1760	179	22100	2250	*	2 - 6160DA - 273	B-110	B-126	B-145
	2430	247	22100	2250	0.87		2010	205	22100	2250	1.02	2 - 6165DA - 273	B-110	B-126	B-145
			29500	**3010**	**1.02**				**29500**	**3010**	**1.02**	**2 - 6170DA - 273**	**B-110**	**B-126**	**B-145**
			29500	3010	1.04				29500	3010	1.26	2 - 6170DB - 273	B-110	B-126	B-145
			29500	3010	1.02				29500	3010	1.02	2 - 6175DA - 273	B-110	B-126	B-145
			29500	3010	1.30				29500	3010	1.57	2 - 6175DB - 273	B-110	B-126	B-145
			41700	4250	1.67				41700	4250	2.01	2 - 6180DA - 273	B-110	B-126	B-145
			41700	4250	2.06				41700	4250	2.12	2 - 6185DA - 273	B-110	B-126	B-145
			41700	4250	2.06				41700	4250	2.49	2 - 6185DB - 273	B-111	B-127	B-146
			59000	6010	2.63				59000	6010	3.17	2 - 6190DA - 273	B-111	B-128	B-147
4.55	1760	179	22100	2250	*	5.49	1760	179	22100	2250	*	2 - 6160DA - 319	B-110	B-126	B-145
	2100	214	22100	2250	*		2100	214	22100	2250	*	2 - 6165DA - 319	B-110	B-126	B-145
	2840	289	**29500**	**3010**	**1.02**		2350	240	**29500**	**3010**	**1.02**	**2 - 6175DA - 319**	**B-110**	**B-126**	**B-145**
			29500	3010	1.11				29500	3010	1.34	2 - 6175DB - 319	B-110	B-126	B-145
			41700	4250	1.43				41700	4250	1.72	2 - 6180DA - 319	B-110	B-126	B-145
			41700	4250	1.76				41700	4250	2.12	2 - 6185DA - 319	B-110	B-126	B-145
			59000	6010	2.25				59000	6010	2.71	2 - 6190DA - 319	B-111	B-128	B-147
			59000	6010	2.81				59000	6010	3.39	2 - 6195DA - 319	B-111	B-128	B-147

1. Combinations in **bold** are the recommended models for operations for 10 hours/day with uniform load (service factor is about 1.0 for motor rating at 50Hz).
2. Motor slippage may affect n_1 and n_2. Refer to technical data for details.
3. CNHM, CHHM, CNFM, CHFM, CNVM, and CVVM indicate types. Refer to page B-10 for details.
4. Lubrication method is different for each model. Refer to "Lubrication" section in page F-4~F-5 for details.
5. "6" at the end of "input capacity symbol" indicates models with 6P motor. Other models come with 4P motor.

Selection Tables Gearmotors

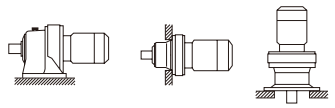

n_1: Motor Speed

1.5 kW	Hz	50Hz		60Hz	
	P	4	6	4	6
	n_1 r/min	1450	980	1750	1165

50Hz						60Hz						Nomenclature	Page of Dimension Sheet		
Output Speed n_2 [r/min]	Output Torque Tout [N·m]	[kgf·m]	Allowable Radial Load Pro [N]	[kgf]	SF	Output Speed n_2 [r/min]	Output Torque Tout [N·m]	[kgf·m]	Allowable Radial Load Pro [N]	[kgf]	SF	Input Capacity - Symbol Frame Size - Reduction Ratio	CNHM CHHM	CNFM CHFM	CNVM CVVM
3.85	2100	214	22100	2250	*	4.64	2100	214	22100	2250	*	2 - 6165DA - 377	B-110	B-126	B-145
	2530	258	29500	3010	*		2530	258	29500	3010	*	2 - 6170DA - 377	B-110	B-126	B-145
	3350	342	29500	3010	0.94		2780	283	29500	3010	1.02	2 - 6175DA - 377	B-110	B-126	B-145
			29500	3010	0.94				29500	3010	1.13	2 - 6175DB - 377	B-110	B-126	B-145
			41700	4250	1.21				41700	4250	1.46	2 - 6180DA - 377	B-110	B-126	B-145
			41700	4250	1.49				41700	4250	1.80	2 - 6185DA - 377	B-110	B-126	B-145
			59000	6010	1.90				59000	6010	2.30	2 - 6190DA - 377	B-111	B-128	B-147
			59000	6010	2.37				59000	6010	2.87	2 - 6195DA - 377	B-111	B-128	B-147
3.07	3150	321	29500	3010	*	3.70	3150	321	29500	3010	*	2 - 6175DA - 473	B-110	B-126	B-145
	4210	429	41700	4250	1.19		3480	355	41700	4250	1.43	2 - 6185DA - 473	B-110	B-126	B-145
			59000	6010	1.52				59000	6010	1.83	2 - 6190DA - 473	B-111	B-128	B-147
			59000	6010	1.89				59000	6010	2.28	2 - 6195DA - 473	B-111	B-128	B-147
2.59	3150	321	29500	3010	*	3.13	3150	321	29500	3010	*	2 - 6175DA - 559	B-110	B-126	B-145
	4060	414	41700	4250	*		4060	414	41700	4250	*	2 - 6180DA - 559	B-110	B-126	B-145
	4970	507	**41700**	**4250**	**1.01**		4120	420	**41700**	**4250**	**1.21**	**2 - 6185DA - 559**	**B-110**	**B-126**	**B-145**
			59000	6010	1.28				59000	6010	1.55	2 - 6190DA - 559	B-111	B-128	B-147
			59000	6010	1.60				59000	6010	1.93	2 - 6195DA - 559	B-111	B-128	B-147
2.23	4050	413	41700	4250	*	2.70	4050	413	41700	4250	*	2 - 6180DA - 649	B-110	B-126	B-145
	5770	588	41300	4210	0.87		4780	487	41700	4250	1.05	2 - 6185DA - 649	B-110	B-126	B-145
			58700	5990	1.11				59000	6010	1.33	2 - 6190DA - 649	B-111	B-128	B-147
			58700	5990	1.38				59000	6010	1.66	2 - 6195DA - 649	B-111	B-128	B-147
1.98	4060	414	41700	4250	*	2.39	4060	414	41700	4250	*	2 - 6180DA - 731	B-110	B-126	B-145
	5000	510	41700	4250	*		5000	510	41700	4250	*	2 - 6185DA - 731	B-110	B-126	B-145
	6500	663	59000	6010	1.22		5390	549	59000	6010	1.48	2 - 6195DA - 731	B-111	B-128	B-147
1.72	5000	510	41700	4250	*	2.08	5000	510	41700	4250	*	2 - 6185DA - 841	B-110	B-126	B-145
	7480	762	**59000**	**6010**	**1.06**		6200	632	**59000**	**6010**	**1.28**	**2 - 6195DA - 841**	**B-111**	**B-128**	**B-147**
			59000	6010	1.06				59000	6010	1.28	2 - 6195DB - 841	B-112	B-128	B-147
1.45	6380	650	58600	5970	*	1.74	6380	650	58600	5970	*	2 - 6190DA - 1003	B-111	B-128	B-147
	8920	909	57900	5900	0.89		7390	753	58300	5940	1.08	2 - 6195DA - 1003	B-111	B-128	B-147
1.16	7960	811	59000	6010	*	1.40	7960	811	59000	6010	*	2 - 6195DA - 1247	B-111	B-128	B-147
0.980	8760	893	84100	8570	*	1.18	8360	853	84100	8570	*	2 - 6205DA - 1479	B-112	B-129	B-148
	13200	1340	104000	10600	0.86		10900	1110	104000	10600	1.03	2 - 6215DA - 1479	B-112	B-129	B-148
0.784	9300	948	84100	8570	*	0.946	9300	948	84100	8570	*	2 - 6205DA - 1849	B-112	B-129	B-148
	12700	1290	104000	10600	*		12700	1290	104000	10600	*	2 - 6215DA - 1849	B-112	B-129	B-148
	16400	1680	145000	14800	0.97		13600	1390	145000	14800	1.17	2 - 6225DA - 1849	B-113	B-130	B-149
0.702	9300	948	84100	8570	*	0.847	9300	948	84100	8570	*	2 - 6205DA - 2065	B-112	B-129	B-148
	12700	1290	104000	10600	*		12700	1290	104000	10600	*	2 - 6215DA - 2065	B-112	B-129	B-148
	18400	1870	145000	14800	0.86		15200	1550	145000	14800	1.04	2 - 6225DA - 2065	B-113	B-130	B-149
0.572	12700	1290	104000	10600	*	0.690	12700	1290	104000	10600	*	2 - 6215DA - 2537	B-112	B-129	B-148
	15900	1620	145000	14800	*		15900	1620	145000	14800	*	2 - 6225DA - 2537	B-113	B-130	B-149
0.476	11300	1150	104000	10600	*	0.575	11300	1150	104000	10600	*	2 - 6215DA - 3045	B-112	B-129	B-148
	15100	1540	145000	14800	*		15100	1540	145000	14800	*	2 - 6225DA - 3045	B-113	B-130	B-149
0.417	12700	1290	104000	10600	*	0.503	12700	1290	104000	10600	*	2 - 6215DA - 3481	B-112	B-129	B-148
	15900	1620	145000	14800	*		15900	1620	145000	14800	*	2 - 6225DA - 3481	B-113	B-130	B-149
0.327	11300	1150	104000	10600	*	0.394	11300	1150	104000	10600	*	2 - 6215DA - 4437	B-112	B-129	B-148
	15100	1540	145000	14800	*		15100	1540	145000	14800	*	2 - 6225DA - 4437	B-113	B-130	B-149
0.282	12700	1290	104000	10600	*	0.341	12700	1290	104000	10600	*	2 - 6215DA - 5133	B-112	B-129	B-148
	15900	1620	145000	14800	*		15900	1620	145000	14800	*	2 - 6225DA - 5133	B-113	B-130	B-149

6. "☆" indicates models manufactured with reducer and motor separately mounted on a common baseplate (horizontal shaft direction) or on an adaptor (vertical shaft direction). Consult us for details, including dimensions.
7. Allowable radial load (Pro) is the value at the midpoint of the slow speed shaft.
8. "(K)" indicates models with reduction ratios equal to nominal ratio. Refer to Table A-3 "6000SK Series (Actual Reduction Ratio)" on page A-4 for actual reduction ratio. Indicated reduction ratio is the same as actual reduction ratio for other models.
9. Maintain torque load during operation within "Output torque" in the table for models with "*" in the SF column. They cannot be operated with 100% motor rating.

Selection Tables Gearmotors

n_1: Motor Speed

1.5 kW	Hz	50Hz		60Hz	
	P	4	6	4	6
	n_1 r/min	1450	980	1750	1165

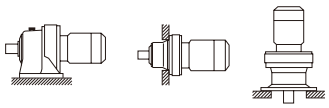

50Hz						60Hz						Nomenclature	Page of Dimension Sheet		
Output Speed n_2 [r/min]	Output Torque Tout [N·m]	[kgf·m]	Allowable Radial Load Pro [N]	[kgf]	SF	Output Speed n_2 [r/min]	Output Torque Tout [N·m]	[kgf·m]	Allowable Radial Load Pro [N]	[kgf]	SF	Input Capacity - Symbol Frame Size - Reduction Ratio	CNHM CHHM	CNFM CHFM	CNVM CVVM
0.235	11300	1150	104000	10600	*	0.283	11300	1150	104000	10600	*	2 - 6215DA - 6177	B-112	B-129	B-148
	15100	1540	145000	14800	*		15100	1540	145000	14800	*	2 - 6225DA - 6177	B-113	B-130	B-149
0.192	11300	1150	104000	10600	*	0.231	11300	1150	104000	10600	*	2 - 6215DA - 7569	B-112	B-129	B-148
	15100	1540	145000	14800	*		15100	1540	145000	14800	*	2 - 6225DA - 7569	B-113	B-130	B-149

n_1: Motor Speed

2.2 kW	Hz	50Hz		60Hz	
	P	4	6	4	6
	n_1 r/min	1450	980	1750	1165

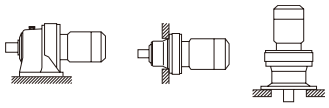

50Hz						60Hz						Nomenclature	Page of Dimension Sheet		
Output Speed n_2 [r/min]	Output Torque Tout [N·m]	[kgf·m]	Allowable Radial Load Pro [N]	[kgf]	SF	Output Speed n_2 [r/min]	Output Torque Tout [N·m]	[kgf·m]	Allowable Radial Load Pro [N]	[kgf]	SF	Input Capacity - Symbol Frame Size - Reduction Ratio	CNHM CHHM	CNFM CHFM	CNVM CVVM
580	34.4	3.51	**2050**	**209**	**1.09**	700	28.5	2.91	**1970**	**201**	**1.09**	**3 - 6090SK - 2.5 (K)**	**B-98**	**-**	**B-133**
			2050	209	1.23				1970	201	1.23	3 - 6095SK - 2.5 (K)	B-98	-	B-133
			2050	209	1.45				1970	201	1.45	3 - 6100SK - 2.5 (K)	B-99	-	B-134
			2050	209	1.70				1970	201	1.70	3 - 6105SK - 2.5 (K)	B-99	-	B-134
			2790	284	2.34				2650	270	2.34	3 - 6110SK - 2.5 (K)	B-99	-	B-134
			2790	284	2.93				2650	270	2.93	3 - 6115SK - 2.5 (K)	B-99	-	B-134
483	41.3	4.21	**2120**	**216**	**1.06**	583	34.2	3.49	**2040**	**208**	**1.06**	**3 - 6090SK - 3 (K)**	**B-98**	**-**	**B-133**
			2120	216	1.20				2040	208	1.20	3 - 6095SK - 3 (K)	B-98	-	B-133
			2120	216	1.50				2040	208	1.50	3 - 6100SK - 3 (K)	B-99	-	B-134
			2120	216	1.76				2040	208	1.76	3 - 6105SK - 3 (K)	B-99	-	B-134
			2960	302	2.40				2820	287	2.40	3 - 6110SK - 3 (K)	B-99	-	B-134
			2960	302	3.00				2820	287	3.00	3 - 6115SK - 3 (K)	B-99	-	B-134
363	55.1	5.61	**2300**	**234**	**1.06**	438	45.6	4.65	**2240**	**228**	**1.06**	**3 - 6090SK - 4 (K)**	**B-98**	**-**	**B-133**
			2300	234	1.20				2240	228	1.20	3 - 6095SK - 4 (K)	B-98	-	B-133
			2300	234	1.46				2240	228	1.46	3 - 6100SK - 4 (K)	B-99	-	B-134
			2300	234	1.72				2240	228	1.72	3 - 6105SK - 4 (K)	B-99	-	B-134
			3170	323	2.43				3010	307	2.43	3 - 6110SK - 4 (K)	B-99	-	B-134
			3170	323	3.04				3010	307	3.04	3 - 6115SK - 4 (K)	B-99	-	B-134
290	68.8	7.02	**2420**	**247**	**1.02**	350	57.0	5.81	**2330**	**238**	**1.02**	**3 - 6090SK - 5 (K)**	**B-98**	**-**	**B-133**
			2420	247	1.20				2330	238	1.20	3 - 6095SK - 5 (K)	B-98	-	B-133
			2420	247	1.43				2330	238	1.43	3 - 6100SK - 5 (K)	B-99	-	B-134
			2420	247	1.68				2330	238	1.68	3 - 6105SK - 5 (K)	B-99	-	B-134
			3330	339	2.09				3180	324	2.09	3 - 6110SK - 5 (K)	B-99	-	B-134
			3330	339	2.62				3180	324	2.62	3 - 6115SK - 5 (K)	B-99	-	B-134
242	82.6	8.42	**2410**	**246**	**1.03**	292	68.4	6.98	**2370**	**242**	**1.03**	**3 - 6095SK - 6 (K)**	**B-98**	**-**	**B-133**
			2410	246	1.21				2370	242	1.21	3 - 6100SK - 6 (K)	B-99	-	B-134
			2410	246	1.43				2370	242	1.43	3 - 6105SK - 6 (K)	B-99	-	B-134
			3520	359	1.92				3370	344	1.92	3 - 6110SK - 6 (K)	B-99	-	B-134
			3520	359	2.40				3370	344	2.40	3 - 6115SK - 6 (K)	B-99	-	B-134
			4090	**417**	**1.07**				**3860**	**393**	**1.07**	**3 - 6100 - 6**	**B-101**	**B-117**	**B-136**
			4090	417	1.45				3860	393	1.45	3 - 6105 - 6	B-101	B-117	B-136
			4640	473	1.61				4370	445	1.61	3 - 6110 - 6	B-101	B-117	B-136
			4640	473	1.78				4370	445	1.78	3 - 6115 - 6	B-101	B-117	B-136
			5260	536	2.30				4950	505	2.30	3 - 6120 - 6	B-101	B-117	B-136

1. Combinations in **bold** are the recommended models for operations for 10 hours/day with uniform load (service factor is about 1.0 for motor rating at 50Hz).
2. Motor slippage may affect n_1 and n_2. Refer to technical data for details.
3. CNHM, CHHM, CNFM, CHFM, CNVM, and CVVM indicate types. Refer to page B-10 for details.
4. Lubrication method is different for each model. Refer to "Lubrication" section in page F-4~F-5 for details.
5. "6" at the end of "input capacity symbol" indicates models with 6P motor. Other models come with 4P motor.

Selection Tables Gearmotors

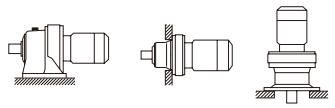

n_1: Motor Speed

2.2 kW	Hz	50Hz		60Hz	
	P	4	6	4	6
	n_1 r/min	1450	980	1750	1165

50Hz						60Hz						Nomenclature						Page of Dimension Sheet		
Output Speed n_2 [r/min]	Output Torque Tout [N·m]	[kgf·m]	Allowable Radial Load Pro [N]	[kgf]	SF	Output Speed n_2 [r/min]	Output Torque Tout [N·m]	[kgf·m]	Allowable Radial Load Pro [N]	[kgf]	SF	Input Capacity	Symbol Frame Size	Reduction Ratio	CNHM CHHM	CNFM CHFM	CNVM CVVM
			2540	259	0.80				2500	255	0.80	3	6095SK	8 (K)	B-98	-	B-133
			2540	**259**	**1.13**				**2500**	**255**	**1.13**	**3**	**6105SK**	**8 (K)**	**B-99**	**-**	**B-134**
			3730	380	1.68				3580	365	1.68	3	6110SK	8 (K)	B-99	-	B-134
			3730	380	2.10				3580	365	2.10	3	6115SK	8 (K)	B-99	-	B-134
181	110	11.2	**4560**	**465**	**1.07**	219	91.2	9.30	**4300**	**438**	**1.07**	**3**	**6100**	**8**	**B-101**	**B-117**	**B-136**
			4560	465	1.45				4300	438	1.45	3	6105	8	B-101	B-117	B-136
			5170	527	1.61				4870	496	1.61	3	6110	8	B-101	B-117	B-136
			5170	527	1.78				4870	496	1.78	3	6115	8	B-101	B-117	B-136
			5870	598	2.30				5520	563	2.30	3	6120	8	B-101	B-117	B-136
			2610	266	0.80				2580	263	0.80	3	6095SK	10 (K)	B-98	-	B-133
145	138	14.0	**2610**	**266**	**1.00**	175	114	11.6	**2580**	**263**	**1.00**	**3**	**6105SK**	**10 (K)**	**B-99**	**-**	**B-134**
			3960	404	1.39				3820	389	1.39	3	6110SK	10 (K)	B-99	-	B-134
			3960	404	1.74				3820	389	1.74	3	6115SK	10 (K)	B-99	-	B-134
			5170	**527**	**1.07**				**4870**	**497**	**1.07**	**3**	**6100**	**11**	**B-101**	**B-117**	**B-136**
			5170	527	1.45				4870	497	1.45	3	6105	11	B-101	B-117	B-136
			5900	601	1.61				5560	567	1.61	3	6110	11	B-101	B-117	B-136
132	151	15.4	5900	601	1.78	159	125	12.8	5560	567	1.78	3	6115	11	B-101	B-117	B-136
			6670	680	2.30				6280	640	2.30	3	6120	11	B-101	B-117	B-136
			6670	680	2.69				6280	640	2.69	3	6125	11	B-101	B-117	B-136
			5360	**547**	**1.07**				**5060**	**516**	**1.07**	**3**	**6100**	**13**	**B-101**	**B-117**	**B-136**
			5360	547	1.45				5060	516	1.45	3	6105	13	B-101	B-117	B-136
			6090	621	1.61				5740	586	1.61	3	6110	13	B-101	B-117	B-136
112	179	18.2	6090	621	1.77	135	148	15.1	5740	586	1.77	3	6115	13	B-101	B-117	B-136
			6890	702	2.30				6490	662	2.30	3	6120	13	B-101	B-117	B-136
			6890	702	2.69				6490	662	2.69	3	6125	13	B-101	B-117	B-136
			5400	**550**	**1.07**				**5340**	**544**	**1.07**	**3**	**6100**	**15**	**B-101**	**B-117**	**B-136**
			5400	550	1.45				5340	544	1.45	3	6105	15	B-101	B-117	B-136
			6490	662	1.61				6120	624	1.61	3	6110	15	B-101	B-117	B-136
96.7	206	21.0	6490	662	1.77	117	171	17.4	6120	624	1.77	3	6115	15	B-101	B-117	B-136
			7390	753	2.30				6960	710	2.30	3	6120	15	B-101	B-117	B-136
			7390	753	2.69				6960	710	2.69	3	6125	15	B-101	B-117	B-136
			5400	**550**	**1.12**				**5400**	**550**	**1.12**	**3**	**6105**	**17**	**B-101**	**B-117**	**B-136**
			6550	668	1.45				6180	630	1.45	3	6110	17	B-101	B-117	B-136
85.3	234	23.9	6550	668	1.77	103	194	19.8	6180	630	1.77	3	6115	17	B-101	B-117	B-136
			7460	760	2.22				7030	716	2.30	3	6120	17	B-101	B-117	B-136
			7460	760	2.57				7030	716	2.57	3	6125	17	B-101	B-117	B-136
			5400	**550**	**1.04**				**5400**	**550**	**1.06**	**3**	**6105**	**21**	**B-101**	**B-117**	**B-136**
			6920	706	1.24				6540	667	1.24	3	6110	21	B-101	B-117	B-136
			6920	706	1.41				6540	667	1.41	3	6115	21	B-101	B-117	B-136
69.0	289	29.5	8180	834	1.80	83.3	240	24.4	7710	786	1.80	3	6120	21	B-101	B-117	B-136
			8180	834	2.18				7710	786	2.22	3	6125	21	B-101	B-117	B-136
			9580	976	2.70				9020	919	2.79	3	6130	21	B-102	B-118	B-137
			7010	**715**	**1.01**				**6620**	**675**	**1.01**	**3**	**6115**	**25**	**B-101**	**B-117**	**B-136**
			8560	873	1.40				8070	823	1.40	3	6120	25	B-101	B-117	B-136
58.0	344	35.1	8560	873	1.80	70.0	285	29.1	8070	823	1.80	3	6125	25	B-101	B-117	B-136
			9950	1010	2.27				9370	955	2.35	3	6130	25	B-102	B-118	B-137
			9950	1010	2.61				9370	955	2.70	3	6135	25	B-102	B-118	B-137
			7160	**730**	**1.01**				**6800**	**693**	**1.01**	**3**	**6115**	**29**	**B-101**	**B-117**	**B-136**
			8880	905	1.30				8380	854	1.36	3	6120	29	B-101	B-117	B-136
			8880	905	1.58				8380	854	1.71	3	6125	29	B-101	B-117	B-136
50.0	399	40.7	10500	1070	1.95	60.3	331	33.7	9850	1000	2.04	3	6130	29	B-102	B-118	B-137
			10500	1070	2.22				9850	1000	2.56	3	6135	29	B-102	B-118	B-137
			15000	1530	2.70				14200	1450	2.70	3	6140	29	B-102	B-118	B-137

6. "☆" indicates models manufactured with reducer and motor separately mounted on a common baseplate (horizontal shaft direction) or on an adaptor (vertical shaft direction). Consult us for details, including dimensions.
7. Allowable radial load (Pro) is the value at the midpoint of the slow speed shaft.
8. "(K)" indicates models with reduction ratios equal to nominal ratio. Refer to Table A-3 "6000SK Series (Actual Reduction Ratio)" on page A-4 for actual reduction ratio. Indicated reduction ratio is the same as actual reduction ratio for other models.
9. Maintain torque load during operation within "Output torque" in the table for models with "*" in the SF column. They cannot be operated with 100% motor rating.

Selection Tables Gearmotors

n_1: Motor Speed

2.2 kW	Hz	50Hz		60Hz	
	P	4	6	4	6
	n_1 r/min	1450	980	1750	1165

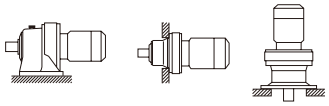

CHHM/CNHM CHFM/CNFM CVVM/CNVM

50Hz						60Hz						Nomenclature					Page of Dimension Sheet		
Output Speed n_2 [r/min]	Output Torque Tout [N·m]	[kgf·m]	Allowable Radial Load Pro [N]	[kgf]	SF	Output Speed n_2 [r/min]	Output Torque Tout [N·m]	[kgf·m]	Allowable Radial Load Pro [N]	[kgf]	SF	Input Capacity	-	Symbol Frame Size	-	Reduction Ratio	CNHM CHHM	CNFM CHFM	CNVM CVVM
			4960	506	0.82				7230	737	0.82	3	-	6115	-	35	B-101	B-117	B-136
			9350	**954**	**1.08**				**8830**	**900**	**1.13**	**3**	**-**	**6120**	**-**	**35**	**B-101**	**B-117**	**B-136**
			9350	954	1.31				8830	900	1.45	3	-	6125	-	35	B-101	B-117	B-136
41.4	482	49.1	11000	1120	1.62	50.0	399	40.7	10300	1050	1.69	3	-	6130	-	35	B-102	B-118	B-137
			11000	1120	1.87				10300	1050	1.93	3	-	6135	-	35	B-102	B-118	B-137
			16000	1630	2.37				15200	1550	2.37	3	-	6140	-	35	B-102	B-118	B-137
			16000	1630	2.85				15200	1550	3.42	3	-	6145	-	35	B-102	B-118	B-137
			9810	**1000**	**1.06**				**9380**	**956**	**1.08**	**3**	**-**	**6125**	**-**	**43**	**B-101**	**B-117**	**B-136**
			11800	1200	1.32				11100	1130	1.36	3	-	6130	-	43	B-102	B-118	B-137
			11800	1200	1.52				11100	1130	1.71	3	-	6135	-	43	B-102	B-118	B-137
33.7	592	60.3	16000	1630	1.79	40.7	490	50.0	15900	1620	1.79	3	-	6140	-	43	B-102	B-118	B-137
			16000	1630	2.12				15900	1620	2.45	3	-	6145	-	43	B-102	B-118	B-137
			20600	2100	2.93				19300	1970	3.39	3	-	6160	-	43	B-103	B-119	B-138
			9810	1000	0.90				9760	995	1.04	3	-	6125	-	51	B-101	B-117	B-136
			12200	**1250**	**1.11**				**11500**	**1180**	**1.15**	**3**	**-**	**6130**	**-**	**51**	**B-102**	**B-118**	**B-137**
			12200	1250	1.16				11500	1180	1.33	3	-	6135	-	51	B-102	B-118	B-137
28.4	702	71.6	16000	1630	1.56	34.3	582	59.3	16000	1630	1.56	3	-	6140	-	51	B-102	B-118	B-137
			16000	1630	1.68				16000	1630	1.92	3	-	6145	-	51	B-102	B-118	B-137
			21300	2180	2.50				20100	2050	2.61	3	-	6160	-	51	B-103	B-119	B-138
			21300	2180	2.99				20100	2050	3.42	3	-	6165	-	51	B-103	B-119	B-138
			12800	**1300**	**1.11**				**12100**	**1230**	**1.15**	**3**	**-**	**6135**	**-**	**59**	**B-102**	**B-118**	**B-137**
			16000	1630	1.35				16000	1630	1.35	3	-	6140	-	59	B-102	B-118	B-137
24.6	812	82.8	16000	1630	1.45	29.7	673	68.6	16000	1630	1.66	3	-	6145	-	59	B-102	B-118	B-137
			22100	2250	2.01				22100	2250	2.01	3	-	6160	-	59	B-103	B-119	B-138
			22100	2250	2.59				22100	2250	2.61	3	-	6165	-	59	B-103	B-119	B-138
			13500	1380	0.92				12800	1300	0.98	3	-	6135	-	71	B-102	B-118	B-137
			16000	**1630**	**1.10**				**16000**	**1630**	**1.10**	**3**	**-**	**6140**	**-**	**71**	**B-102**	**B-118**	**B-137**
20.4	977	99.6	16000	1630	1.19	24.6	810	82.5	16000	1630	1.38	3	-	6145	-	71	B-102	B-118	B-137
			22100	2250	1.58				22100	2250	1.58	3	-	6160	-	71	B-103	B-119	B-138
			22100	2250	2.15				22100	2250	2.57	3	-	6165	-	71	B-103	B-119	B-138
			16000	1630	0.98				16000	1630	1.13	3	-	6145	-	87	B-102	B-118	B-137
16.7	1200	122	22100	2250	1.46	20.1	992	101	22100	2250	1.58	3	-	6160	-	87	B-103	B-119	B-138
			22100	2250	1.71				22100	2250	1.77	3	-	6165	-	87	B-103	B-119	B-138
	780	79.5	14700	1500	*		780	79.5	14700	1500	*	3	-	6130DC	-	104	B-109	B-125	B-144
	940	95.8	14700	1500	*		940	95.8	14700	1500	*	3	-	6135DC	-	104	B-109	B-125	B-144
			16000	**1630**	**1.01**				**16000**	**1630**	**1.22**	**3**	**-**	**6145DC**	**-**	**104**	**B-109**	**B-125**	**B-144**
			22100	2250	1.29				22100	2250	1.45	3	-	6160DB	-	104	B-110	B-126	B-145
			22100	2250	1.29				22100	2250	1.56	3	-	6160DC	-	104	B-111	B-127	B-146
13.9			22100	2250	1.45	16.8			22100	2250	1.45	3	-	6165DB	-	104	B-110	B-126	B-145
	1360	138	22100	2250	1.55		1120	115	22100	2250	1.87	3	-	6165DC	-	104	B-111	B-127	B-146
			29500	3010	1.86				29400	3000	2.25	3	-	6170DC	-	104	B-111	B-127	B-146
			29500	3010	2.32				29400	3000	2.80	3	-	6175DC	-	104	B-111	B-127	B-146
			41300	4210	2.99				38800	3960	3.61	3	-	6180DB	-	104	B-111	B-127	B-146

1. Combinations in **bold** are the recommended models for operations for 10 hours/day with uniform load (service factor is about 1.0 for motor rating at 50Hz).
2. Motor slippage may affect n_1 and n_2. Refer to technical data for details.
3. CNHM, CHHM, CNFM, CHFM, CNVM, and CVVM indicate types. Refer to page B-10 for details.
4. Lubrication method is different for each model. Refer to "Lubrication" section in page F-4~F-5 for details.
5. "6" at the end of "input capacity symbol" indicates models with 6P motor. Other models come with 4P motor.

Selection Tables Gearmotors

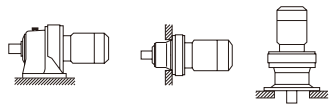

n_1: Motor Speed

2.2 kW	Hz	50Hz		60Hz	
	P	4	6	4	6
	n_1 r/min	1450	980	1750	1165

50Hz						60Hz						Nomenclature	Page of Dimension Sheet		
Output Speed n_2 [r/min]	Output Torque Tout [N·m]	[kgf·m]	Allowable Radial Load Pro [N]	[kgf]	SF	Output Speed n_2 [r/min]	Output Torque Tout [N·m]	[kgf·m]	Allowable Radial Load Pro [N]	[kgf]	SF	Input Capacity - Symbol Frame Size - Reduction Ratio	CNHM CHHM	CNFM CHFM	CNVM CVVM
12.0	940	95.8	14700	1500	*	14.5	940	95.8	14700	1500	*	3 - 6135DC - 121	B-109	B-125	B-144
	1230	125	16000	1630	*		1230	125	16000	1630	*	3 - 6140DC - 121	B-109	B-125	B-144
	1290	132	16000	1630	*		1290	132	16000	1630	*	3 - 6145DC - 121	B-109	B-125	B-144
	1580	161	15300	1560	0.82		1310	133	16000	1630	0.98	3 - 6145DC - 121	B-109	B-125	B-144
			22100	2250	1.11				22100	2250	1.34	3 - 6160DB - 121	B-110	B-126	B-145
			22100	2250	1.11				22100	2250	1.34	3 - 6160DC - 121	B-111	B-127	B-146
			22100	2250	1.33				22100	2250	1.45	3 - 6165DB - 121	B-110	B-126	B-145
			22100	2250	1.33				22100	2250	1.61	3 - 6165DC - 121	B-111	B-127	B-146
			29500	3010	1.45				29500	3010	1.45	3 - 6170DB - 121	B-110	B-126	B-145
			29500	3010	1.60				29500	3010	1.94	3 - 6170DC - 121	B-111	B-127	B-146
			29500	3010	2.00				29500	3010	2.41	3 - 6175DC - 121	B-111	B-127	B-146
			41700	4250	2.57				41300	4210	3.11	3 - 6180DB - 121	B-111	B-127	B-146
10.1	1230	125	16000	1630	*	12.2	1230	125	16000	1630	*	3 - 6140DC - 143	B-109	B-125	B-144
	1370	140	15900	1620	*		1370	140	15900	1620	*	3 - 6145DC - 143	B-109	B-125	B-144
	1860	190	22100	2250	1.13		1550	158	22100	2250	1.36	3 - 6165DB - 143	B-110	B-126	B-145
			29500	3010	1.35				29500	3010	1.45	3 - 6170DB - 143	B-110	B-126	B-145
			29500	3010	1.35				29500	3010	1.64	3 - 6170DC - 143	B-111	B-127	B-146
			29500	3010	1.45				29500	3010	1.45	3 - 6175DB - 143	B-110	B-126	B-145
			29500	3010	1.69				29500	3010	2.04	3 - 6175DC - 143	B-111	B-127	B-146
			41700	4250	2.18				41700	4250	2.63	3 - 6180DB - 143	B-111	B-127	B-146
			41700	4250	2.63				41700	4250	3.17	3 - 6185DB - 143	B-111	B-127	B-146
			59000	6010	2.69				59000	6010	2.69	3 - 6190DA - 143	B-111	B-128	B-147
8.79	1230	125	16000	1630	*	10.6	1230	125	16000	1630	*	3 - 6140DC - 165	B-109	B-125	B-144
	1360	138	16000	1630	*		1360	138	16000	1630	*	3 - 6145DC - 165	B-109	B-125	B-144
	1760	179	22100	2250	*		1760	179	22100	2250	*	3 - 6160DB - 165	B-110	B-126	B-145
	2150	219	22100	2250	0.98		1780	182	22100	2250	1.18	3 - 6165DB - 165	B-110	B-126	B-145
			29500	3010	1.18				29500	3010	1.42	3 - 6170DB - 165	B-110	B-126	B-145
			29500	3010	1.45				29500	3010	1.45	3 - 6175DB - 165	B-110	B-126	B-145
			29500	3010	1.46				29500	3010	1.77	3 - 6175DC - 165	B-111	B-127	B-146
			41700	4250	1.45				41700	4250	1.45	3 - 6180DA - 165	B-110	B-126	B-145
			41700	4250	1.89				41700	4250	2.28	3 - 6180DB - 165	B-111	B-127	B-146
			41700	4250	2.29				41700	4250	2.76	3 - 6185DB - 165	B-111	B-127	B-146
			59000	6010	2.69				59000	6010	2.69	3 - 6190DA - 165	B-111	B-128	B-147
			59000	6010	2.97				59000	6010	3.58	3 - 6190DB - 165	B-112	B-128	B-147
7.44	1760	179	22100	2250	*	8.97	1760	179	22100	2250	*	3 - 6160DB - 195	B-110	B-126	B-145
	2100	214	22100	2250	*		2100	214	22100	2250	*	3 - 6165DB - 195	B-110	B-126	B-145
	2540	259	22100	2250	0.83		2110	215	22100	2250	1.00	3 - 6165DB - 195	B-110	B-126	B-145
			29500	3010	0.98				29500	3010	1.20	3 - 6170DB - 195	B-110	B-126	B-145
			29500	3010	1.24				29500	3010	1.45	3 - 6175DB - 195	B-110	B-126	B-145
			41700	4250	1.45				41700	4250	1.45	3 - 6180DA - 195	B-110	B-126	B-145
			41700	4250	1.60				41700	4250	1.93	3 - 6180DB - 195	B-111	B-127	B-146
			41700	4250	1.94				41700	4250	2.34	3 - 6185DB - 195	B-111	B-127	B-146
			59000	6010	2.51				59000	6010	2.69	3 - 6190DA - 195	B-111	B-128	B-147
			59000	6010	2.51				59000	6010	3.03	3 - 6190DB - 195	B-112	B-128	B-147
			59000	6010	2.56				59000	6010	2.69	3 - 6195DA - 195	B-111	B-128	B-147
			84100	8570	2.69				84100	8570	2.69	3 - 6205DA - 195	B-112	B-129	B-148

6. "☆" indicates models manufactured with reducer and motor separately mounted on a common baseplate (horizontal shaft direction) or on an adaptor (vertical shaft direction). Consult us for details, including dimensions.
7. Allowable radial load (Pro) is the value at the midpoint of the slow speed shaft.
8. "(K)" indicates models with reduction ratios equal to nominal ratio. Refer to Table A-3 "6000SK Series (Actual Reduction Ratio)" on page A-4 for actual reduction ratio. Indicated reduction ratio is the same as actual reduction ratio for other models.
9. Maintain torque load during operation within "Output torque" in the table for models with "*" in the SF column. They cannot be operated with 100% motor rating.

Selection Tables Gearmotors

n_1: Motor Speed

2.2 kW	Hz	50Hz		60Hz	
	P	4	6	4	6
	n_1 r/min	1450	980	1750	1165

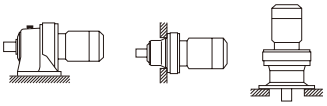

CHHM/CNHM CHFM/CNFM CVVM/CNVM

50Hz						60Hz						Nomenclature	Page of Dimension Sheet		
Output Speed n_2 [r/min]	Output Torque Tout [N·m]	[kgf·m]	Allowable Radial Load Pro [N]	[kgf]	SF	Output Speed n_2 [r/min]	Output Torque Tout [N·m]	[kgf·m]	Allowable Radial Load Pro [N]	[kgf]	SF	Input Capacity - Symbol Frame Size - Reduction Ratio	CNHM CHHM	CNFM CHFM	CNVM CVVM
	1760	179	22100	2250	*		1760	179	22100	2250	*	3 - 6160DB - 231	B-110	B-126	B-145
	2100	214	22100	2250	*		2100	214	22100	2250	*	3 - 6165DB - 231	B-110	B-126	B-145
			29500	**3010**	**1.05**				**29500**	**3010**	**1.26**	**3 - 6175DB - 231**	**B-110**	**B-126**	**B-145**
			41700	4250	1.34				41700	4250	1.45	3 - 6180DA - 231	B-110	B-126	B-145
			41700	4250	1.34				41700	4250	1.62	3 - 6180DB - 231	B-111	B-127	B-146
6.28			41700	4250	1.45	7.58			41700	4250	1.45	3 - 6185DA - 231	B-110	B-126	B-145
	3010	307	41700	4250	1.66		2500	254	41700	4250	2.00	3 - 6185DB - 231	B-111	B-127	B-146
			59000	6010	2.12				59000	6010	2.56	3 - 6190DA - 231	B-111	B-128	B-147
			59000	6010	2.64				59000	6010	2.69	3 - 6195DA - 231	B-111	B-128	B-147
			59000	6010	2.64				59000	6010	3.19	3 - 6195DB - 231	B-112	B-128	B-147
	2100	214	22100	2250	*		2100	214	22100	2250	*	3 - 6165DB - 273	B-110	B-126	B-145
	2530	258	29500	3010	*		2530	258	29500	3010	*	3 - 6170DB - 273	B-110	B-126	B-145
			29500	3010	0.88				29500	3010	1.07	3 - 6175DB - 273	B-110	B-126	B-145
			41700	4250	1.14				41700	4250	1.37	3 - 6180DA - 273	B-110	B-126	B-145
5.31			41700	4250	1.40	6.41			41700	4250	1.45	3 - 6185DA - 273	B-110	B-126	B-145
	3560	363	41700	4250	1.40		2950	301	41700	4250	1.70	3 - 6185DB - 273	B-111	B-127	B-146
			59000	6010	1.79				59000	6010	2.16	3 - 6190DA - 273	B-111	B-128	B-147
			59000	6010	2.24				59000	6010	2.69	3 - 6195DA - 273	B-111	B-128	B-147
			84100	8570	2.35				84100	8570	2.66	3 - 6205DA - 273	B-112	B-129	B-148
			84100	8570	2.61				84100	8570	3.14	3 - 6205DB - 273	B-112	B-129	B-148
	2530	258	29500	3010	*		2530	258	29500	3010	*	3 - 6170DB - 319	B-110	B-126	B-145
	3150	321	29500	3010	*		3150	321	29500	3010	*	3 - 6175DB - 319	B-110	B-126	B-145
			41700	4250	1.20				41700	4250	1.45	3 - 6185DA - 319	B-110	B-126	B-145
4.55			59000	6010	1.53	5.49			59000	6010	1.85	3 - 6190DA - 319	B-111	B-128	B-147
	4160	424	59000	6010	1.91		3450	351	59000	6010	2.31	3 - 6195DA - 319	B-111	B-128	B-147
			84100	8570	1.94				84100	8570	2.20	3 - 6205DA - 319	B-112	B-129	B-148
			84100	8570	2.22				84100	8570	2.68	3 - 6205DB - 319	B-112	B-129	B-148
	3150	321	29500	3010	*		3150	321	29500	3010	*	3 - 6175DB - 377	B-110	B-126	B-145
	4050	413	41700	4250	*		4050	413	41700	4250	*	3 - 6180DA - 377	B-110	B-126	B-145
			41700	**4250**	**1.02**				**41700**	**4250**	**1.23**	**3 - 6185DA - 377**	**B-110**	**B-126**	**B-145**
3.85			59000	6010	1.30	4.64			59000	6010	1.57	3 - 6190DA - 377	B-111	B-128	B-147
	4920	501	59000	6010	1.62		4070	415	59000	6010	1.95	3 - 6195DA - 377	B-111	B-128	B-147
			84100	8570	1.74				84100	8570	1.97	3 - 6205DA - 377	B-112	B-129	B-148
			84100	8570	1.88				84100	8570	2.27	3 - 6205DB - 377	B-112	B-129	B-148
			104000	10600	2.57				104000	10600	3.11	3 - 6215DA - 377	B-112	B-129	B-148
	4060	414	41700	4250	*		4060	414	41700	4250	*	3 - 6180DA - 473	B-110	B-126	B-145
	5000	510	41700	4250	*		5000	510	41700	4250	*	3 - 6185DA - 473	B-110	B-126	B-145
			41700	4250	0.81				41700	4250	0.98	3 - 6185DA - 473	B-110	B-126	B-145
			59000	**6010**	**1.03**				**59000**	**6010**	**1.25**	**3 - 6190DA - 473**	**B-111**	**B-128**	**B-147**
3.07			59000	6010	1.29	3.70			59000	6010	1.56	3 - 6195DA - 473	B-111	B-128	B-147
	6170	629	84100	8570	1.34		5110	521	84100	8570	1.52	3 - 6205DA - 473	B-112	B-129	B-148
			84100	8570	1.51				84100	8570	1.82	3 - 6205DB - 473	B-112	B-129	B-148
			104000	10600	2.05				104000	10600	2.48	3 - 6215DA - 473	B-112	B-129	B-148
			145000	14800	2.59				145000	14800	3.13	3 - 6225DA - 473	B-113	B-130	B-149
	5000	510	41700	4250	*		5000	510	41700	4250	*	3 - 6185DA - 559	B-110	B-126	B-145
			59000	6010	1.09				59000	6010	1.32	3 - 6195DA - 559	B-111	B-128	B-147
			84100	8570	1.20				84100	8570	1.36	3 - 6205DA - 559	B-112	B-129	B-148
2.59	7290	743	84100	8570	1.28	3.13	6040	616	84100	8570	1.54	3 - 6205DB - 559	B-112	B-129	B-148
			104000	10600	1.74				104000	10600	2.09	3 - 6215DA - 559	B-112	B-129	B-148
			145000	14800	2.19				145000	14800	2.65	3 - 6225DA - 559	B-113	B-130	B-149
			179000	18200	2.81				179000	18200	3.39	3 - 6235DA - 559	B-114	B-131	B-150

1. Combinations in **bold** are the recommended models for operations for 10 hours/day with uniform load (service factor is about 1.0 for motor rating at 50Hz).
2. Motor slippage may affect n_1 and n_2. Refer to technical data for details.
3. CNHM, CHHM, CNFM, CHFM, CNVM, and CVVM indicate types. Refer to page B-10 for details.
4. Lubrication method is different for each model. Refer to "Lubrication" section in page F-4~F-5 for details.
5. "6" at the end of "input capacity symbol" indicates models with 6P motor. Other models come with 4P motor.

Selection Tables Gearmotors

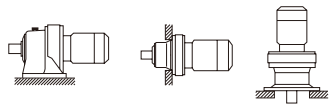

2.2 kW

n_1: Motor Speed

Hz	50Hz		60Hz	
P	4	6	4	6
n_1 r/min	1450	980	1750	1165

50Hz						60Hz						Nomenclature	Page of Dimension Sheet		
Output Speed n_2 [r/min]	Output Torque Tout [N·m]	[kgf·m]	Allowable Radial Load Pro [N]	[kgf]	SF	Output Speed n_2 [r/min]	Output Torque Tout [N·m]	[kgf·m]	Allowable Radial Load Pro [N]	[kgf]	SF	Input Capacity - Symbol Frame Size - Reduction Ratio	CNHM CHHM	CNFM CHFM	CNVM CVVM
2.23	5000	510	41600	4240	*	2.70	5000	510	41600	4240	*	3 - 6185DA - 649	B-110	B-126	B-145
	6380	650	58600	5970	*		6380	650	58600	5970	*	3 - 6190DA - 649	B-111	B-128	B-147
	8460	863	58000	5910	0.94		7010	715	58400	5950	1.14	3 - 6195DA - 649	B-111	B-128	B-147
			84100	8570	0.98				84100	8570	1.11	3 - 6205DA - 649	B-112	B-129	B-148
			84100	8570	1.10				84100	8570	1.33	3 - 6205DB - 649	B-112	B-129	B-148
			104000	10600	1.49				104000	10600	1.80	3 - 6215DA - 649	B-112	B-129	B-148
			145000	14800	1.88				145000	14800	2.26	3 - 6225DA - 649	B-113	B-130	B-149
			179000	18200	2.42				179000	18200	2.92	3 - 6235DA - 649	B-114	B-131	B-150
1.98	6380	650	59000	6010	*	2.39	6380	650	59000	6010	*	3 - 6190DA - 731	B-111	B-128	B-147
	9530	972	58500	5970	0.84		7900	805	59000	6010	1.01	3 - 6195DA - 731	B-111	B-128	B-147
			84100	8570	0.98				84100	8570	1.15	3 - 6205DA - 731	B-112	B-129	B-148
			84100	8570	0.98				84100	8570	1.18	3 - 6205DB - 731	B-112	B-129	B-148
			104000	10600	1.33				104000	10600	1.60	3 - 6215DA - 731	B-112	B-129	B-148
			145000	14800	1.68				145000	14800	2.03	3 - 6225DA - 731	B-113	B-130	B-149
			179000	18200	2.15				179000	18200	2.60	3 - 6235DA - 731	B-114	B-131	B-150
			208000	21200	2.71				208000	21200	3.27	3 - 6245DA - 731	B-114	B-131	B-150
1.72	6380	650	59000	6010	*	2.08	6380	650	59000	6010	*	3 - 6190DA - 841	B-111	B-128	B-147
	7960	811	59000	6010	*		7960	811	59000	6010	*	3 - 6195DA - 841	B-111	B-128	B-147
	11000	1120	84100	8570	0.84		9090	926	84100	8570	1.02	3 - 6205DA - 841	B-112	B-129	B-148
			104000	10600	1.15				104000	10600	1.39	3 - 6215DA - 841	B-112	B-129	B-148
			145000	14800	1.37				145000	14800	1.65	3 - 6225DA - 841	B-113	B-130	B-149
			179000	18200	1.72				179000	18200	2.08	3 - 6235DA - 841	B-114	B-131	B-150
			208000	21200	2.35				208000	21200	2.84	3 - 6245DA - 841	B-114	B-131	B-150
1.45	7960	811	58100	5930	*	1.74	7960	811	58100	5930	*	3 - 6195DA - 1003	B-111	B-128	B-147
	9300	948	84100	8570	*		9060	923	84100	8570	*	3 - 6205DA - 1003	B-112	B-129	B-148
	13100	1330	104000	10600	0.97		10800	1100	104000	10600	1.17	3 - 6215DA - 1003	B-112	B-129	B-148
			145000	14800	1.21				145000	14800	1.46	3 - 6225DA - 1003	B-113	B-130	B-149
			179000	18200	1.57				179000	18200	1.89	3 - 6235DA - 1003	B-114	B-131	B-150
			208000	21200	1.97				208000	21200	2.38	3 - 6245DA - 1003	B-114	B-131	B-150
1.16	9300	948	84100	8570	*	1.40	9300	948	84100	8570	*	3 - 6205DA - 1247	B-112	B-129	B-148
	12700	1290	104000	10600	*		12700	1290	104000	10600	*	3 - 6215DA - 1247	B-112	B-129	B-148
	16300	1660	145000	14800	0.98		13500	1370	145000	14800	1.19	3 - 6225DA - 1247	B-113	B-130	B-149
			179000	18200	1.26				179000	18200	1.52	3 - 6235DA - 1247	B-114	B-131	B-150
			208000	21200	1.59				208000	21200	1.91	3 - 6245DA - 1247	B-114	B-131	B-150
0.980	11300	1150	104000	10600	*	1.18	11300	1150	104000	10600	*	3 - 6215DA - 1479	B-112	B-129	B-148
	15100	1540	145000	14800	*		15100	1540	145000	14800	*	3 - 6225DA - 1479	B-113	B-130	B-149
	19300	1970	179000	18200	0.89		16000	1630	179000	18200	1.07	3 - 6235DA - 1479	B-114	B-131	B-150
			208000	21200	1.17				208000	21200	1.42	3 - 6245DA - 1479	B-114	B-131	B-150
0.784	16000	1630	145000	14800	*	0.946	16000	1630	145000	14800	*	3 - 6225DA - 1849	B-113	B-130	B-149
	24100	2460	179000	18200	0.85		20000	2040	179000	18200	1.03	3 - 6235DA - 1849	B-114	B-131	B-150
			208000	**21200**	**1.07**				**208000**	**21200**	**1.29**	**3 - 6245DA - 1849**	**B-114**	**B-131**	**B-150**
0.702	15900	1620	145000	14800	*	0.847	15900	1620	145000	14800	*	3 - 6225DA - 2065	B-113	B-130	B-149
	20500	2090	179000	18200	*		20500	2090	179000	18200	*	3 - 6235DA - 2065	B-114	B-131	B-150
	26900	2750	208000	21200	0.96		22300	2270	208000	21200	1.16	3 - 6245DA - 2065	B-114	B-131	B-150
0.572	20500	2090	179000	18200	*	0.690	20500	2090	179000	18200	*	3 - 6235DA - 2537	B-114	B-131	B-150
	25800	2630	208000	21200	*		25800	2630	208000	21200	*	3 - 6245DA - 2537	B-114	B-131	B-150
0.476	17200	1750	179000	18200	*	0.575	17200	1750	179000	18200	*	3 - 6235DA - 3045	B-114	B-131	B-150
	22600	2310	208000	21200	*		22600	2310	208000	21200	*	3 - 6245DA - 3045	B-114	B-131	B-150
0.417	20500	2090	179000	18200	*	0.503	20500	2090	179000	18200	*	3 - 6235DA - 3481	B-114	B-131	B-150
	25800	2630	208000	21200	*		25800	2630	208000	21200	*	3 - 6245DA - 3481	B-114	B-131	B-150
0.327	17200	1750	179000	18200	*	0.394	17200	1750	179000	18200	*	3 - 6235DA - 4437	B-114	B-131	B-150
	22600	2310	208000	21200	*		22600	2310	208000	21200	*	3 - 6245DA - 4437	B-114	B-131	B-150
0.282	20500	2090	179000	18200	*	0.341	20500	2090	179000	18200	*	3 - 6235DA - 5133	B-114	B-131	B-150
	25800	2630	208000	21200	*		25800	2630	208000	21200	*	3 - 6245DA - 5133	B-114	B-131	B-150
0.235	17200	1750	179000	18200	*	0.283	17200	1750	179000	18200	*	3 - 6235DA - 6177	B-114	B-131	B-150
	22600	2310	208000	21200	*		22600	2310	208000	21200	*	3 - 6245DA - 6177	B-114	B-131	B-150

6. "☆" indicates models manufactured with reducer and motor separately mounted on a common baseplate (horizontal shaft direction) or on an adaptor (vertical shaft direction). Consult us for details, including dimensions.
7. Allowable radial load (Pro) is the value at the midpoint of the slow speed shaft.
8. "(K)" indicates models with reduction ratios equal to nominal ratio. Refer to Table A-3 "6000SK Series (Actual Reduction Ratio)" on page A-4 for actual reduction ratio. Indicated reduction ratio is the same as actual reduction ratio for other models.
9. Maintain torque load during operation within "Output torque" in the table for models with "*" in the SF column. They cannot be operated with 100% motor rating.

Selection Tables Gearmotors

2.2 kW

n_1: Motor Speed

Hz	50Hz		60Hz	
P	4	6	4	6
n_1 r/min	1450	980	1750	1165

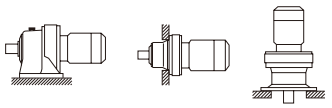

50Hz						60Hz						Nomenclature	Page of Dimension Sheet		
Output Speed n_2 [r/min]	Output Torque Tout [N·m]	[kgf·m]	Allowable Radial Load Pro [N]	[kgf]	SF	Output Speed n_2 [r/min]	Output Torque Tout [N·m]	[kgf·m]	Allowable Radial Load Pro [N]	[kgf]	SF	Input Capacity - Symbol Frame Size - Reduction Ratio	CNHM CHHM	CNFM CHFM	CNVM CVVM
0.192	17200	1750	179000	18200	*	0.231	17200	1750	179000	18200	*	3 - 6235DA - 7569	B-114	B-131	B-150
	22600	2310	208000	21200	*		22600	2310	208000	21200	*	3 - 6245DA - 7569	B-114	B-131	B-150

3.0 kW

n_1: Motor Speed

Hz	50Hz		60Hz	
P	4	6	4	6
n_1 r/min	1450	980	1750	1165

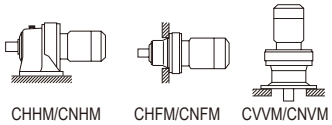

50Hz						60Hz						Nomenclature	Page of Dimension Sheet		
Output Speed n_2 [r/min]	Output Torque Tout [N·m]	[kgf·m]	Allowable Radial Load Pro [N]	[kgf]	SF	Output Speed n_2 [r/min]	Output Torque Tout [N·m]	[kgf·m]	Allowable Radial Load Pro [N]	[kgf]	SF	Input Capacity - Symbol Frame Size - Reduction Ratio	CNHM CHHM	CNFM CHFM	CNVM CVVM
580	46.9	4.78	**1930**	**197**	**1.06**	700	38.9	3.96	**1870**	**191**	**1.06**	**4 - 6100SK - 2.5 (K)**	**B-99**	**-**	**B-134**
			1930	197	1.25				1870	191	1.25	4 - 6105SK - 2.5 (K)	B-99	-	B-134
			2700	275	1.72				2570	262	1.72	4 - 6110SK - 2.5 (K)	B-99	-	B-134
			2700	275	2.15				2570	262	2.15	4 - 6115SK - 2.5 (K)	B-99	-	B-134
483	56.3	5.74	**1980**	**202**	**1.10**	583	46.7	4.76	**1920**	**196**	**1.10**	**4 - 6100SK - 3 (K)**	**B-99**	**-**	**B-134**
			1980	202	1.29				1920	196	1.29	4 - 6105SK - 3 (K)	B-99	-	B-134
			2850	291	1.76				2730	278	1.76	4 - 6110SK - 3 (K)	B-99	-	B-134
			2850	291	2.20				2730	278	2.20	4 - 6115SK - 3 (K)	B-99	-	B-134
363	75.1	7.65	**2130**	**217**	**1.07**	583	62.2	6.34	**2080**	**212**	**1.07**	**4 - 6100SK - 4 (K)**	**B-99**	**-**	**B-134**
			2130	217	1.26				2080	212	1.26	4 - 6105SK - 4 (K)	B-99	-	B-134
			3040	310	1.78				2900	296	1.78	4 - 6110SK - 4 (K)	B-99	-	B-134
			3040	310	2.23				2900	296	2.23	4 - 6115SK - 4 (K)	B-99	-	B-134
290	93.9	9.57	**2210**	**225**	**1.23**	350	77.8	7.93	**2160**	**220**	**1.23**	**4 - 6105SK - 5 (K)**	**B-99**	**-**	**B-134**
			3180	324	1.54				3040	310	1.26	4 - 6110SK - 5 (K)	B-99	-	B-134
			3180	324	1.92				3040	310	1.78	4 - 6115SK - 5 (K)	B-99	-	B-134
242	113	11.5	**2190**	**223**	**1.05**	292	93.3	9.51	**2160**	**220**	**1.05**	**4 - 6105SK - 6 (K)**	**B-99**	**-**	**B-134**
			3330	339	1.41				3210	327	1.41	4 - 6110SK - 6 (K)	B-99	-	B-134
			3330	339	1.76				3210	327	1.76	4 - 6115SK - 6 (K)	B-99	-	B-134
			4610	470	1.18				4340	443	1.18	4 - 6110 - 6	B-101	B-117	B-136
			4610	470	1.31				4340	443	1.31	4 - 6115 - 6	B-101	B-117	B-136
			5230	534	1.69				4930	502	1.69	4 - 6120 - 6	B-101	B-117	B-136
			5230	534	2.32				4930	502	1.94	4 - 6125 - 6	B-101	B-117	B-136
181	150	15.3	2170	221	0.83	219	124	12.7	2190	223	0.83	4 - 6105SK - 8 (K)	B-99	-	B-134
			3470	**354**	**1.23**				**3370**	**344**	**1.23**	**4 - 6110SK - 8 (K)**	**B-99**	**-**	**B-134**
			3470	354	1.54				3370	344	1.54	4 - 6115SK - 8 (K)	B-99	-	B-134
			5130	523	1.18				4830	493	1.18	4 - 6110 - 8	B-101	B-117	B-136
			5130	523	1.31				4830	493	1.31	4 - 6115 - 8	B-101	B-117	B-136
			5830	595	1.69				5490	560	1.69	4 - 6120 - 8	B-101	B-117	B-136
			5830	595	2.32				5490	560	2.32	4 - 6125 - 8	B-101	B-117	B-136
145	188	19.1	**3650**	**372**	**1.02**	175	156	15.9	**3550**	**362**	**1.02**	**4 - 6110SK - 10 (K)**	**B-99**	**-**	**B-134**
			3650	372	1.27				3550	362	1.27	4 - 6115SK - 10 (K)	B-99	-	B-134
132	206	21.0	**5840**	**595**	**1.18**	159	171	17.4	**5510**	**561**	**1.18**	**4 - 6110 - 11**	**B-101**	**B-117**	**B-136**
			5840	595	1.31				5510	561	1.31	4 - 6115 - 11	B-101	B-117	B-136
			6620	675	1.69				6240	636	1.69	4 - 6120 - 11	B-101	B-117	B-136
			6620	675	1.97				6240	636	1.97	4 - 6125 - 11	B-101	B-117	B-136

1. Combinations in **bold** are the recommended models for operations for 10 hours/day with uniform load (service factor is about 1.0 for motor rating at 50Hz).
2. Motor slippage may affect n_1 and n_2. Refer to technical data for details.
3. CNHM, CHHM, CNFM, CHFM, CNVM, and CVVM indicate types. Refer to page B-10 for details.
4. Lubrication method is different for each model. Refer to "Lubrication" section in page F-4~F-5 for details.
5. "6" at the end of "input capacity symbol" indicates models with 6P motor. Other models come with 4P motor.

Selection Tables Gearmotors

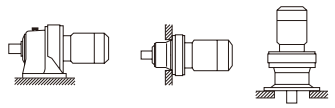

n_1: Motor Speed

3.0 kW	Hz	50Hz		60Hz	
	P	4	6	4	6
	n_1 r/min	1450	980	1750	1165

50Hz						60Hz						Nomenclature						Page of Dimension Sheet		
Output Speed n_2 [r/min]	Output Torque Tout [N·m]	[kgf·m]	Allowable Radial Load Pro [N]	[kgf]	SF	Output Speed n_2 [r/min]	Output Torque Tout [N·m]	[kgf·m]	Allowable Radial Load Pro [N]	[kgf]	SF	Input Capacity	-	Symbol Frame Size	-	Reduction Ratio		CNHM CHHM	CNFM CHFM	CNVM CVVM
			6020	**614**	**1.18**				**5690**	**580**	**1.18**	**4**	**-**	**6110**	**-**	**13**		**B-101**	**B-117**	**B-136**
			6020	614	1.30				5690	580	1.30	4	-	6115	-	13		B-101	B-117	B-136
112	244	24.9	6830	696	1.69	135	202	20.6	6440	657	1.69	4	-	6120	-	13		B-101	B-117	B-136
			6830	696	1.97				6440	657	1.97	4	-	6125	-	13		B-101	B-117	B-136
			6410	**653**	**1.18**				**6050**	**617**	**1.18**	**4**	**-**	**6110**	**-**	**15**		**B-101**	**B-117**	**B-136**
			6410	653	1.30				6050	617	1.30	4	-	6115	-	15		B-101	B-117	B-136
			7320	747	1.69				6910	704	1.69	4	-	6120	-	15		B-101	B-117	B-136
96.7	282	28.7	7320	747	1.97	117	233	23.8	6910	704	1.97	4	-	6125	-	15		B-101	B-117	B-136
			8290	845	2.59				7810	796	2.59	4	-	6130	-	15		B-102	B-118	B-137
			8290	845	2.99				7810	796	2.99	4	-	6135	-	15		B-102	B-118	B-137
			6460	**659**	**1.06**				**6110**	**622**	**1.06**	**4**	**-**	**6110**	**-**	**17**		**B-101**	**B-117**	**B-136**
			6460	659	1.30				6110	622	1.30	4	-	6115	-	17		B-101	B-117	B-136
			7390	753	1.63				6970	710	1.69	4	-	6120	-	17		B-101	B-117	B-136
85.3	319	32.5	7390	753	1.89	103	264	27.0	6970	710	1.89	4	-	6125	-	17		B-101	B-117	B-136
			8900	907	2.42				8380	854	2.42	4	-	6130	-	17		B-102	B-118	B-137
			8900	907	2.76				8380	854	2.76	4	-	6135	-	17		B-102	B-118	B-137
			6800	**693**	**1.04**				**6440**	**657**	**1.04**	**4**	**-**	**6115**	**-**	**21**		**B-101**	**B-117**	**B-136**
			8090	825	1.32				7640	779	1.32	4	-	6120	-	21		B-101	B-117	B-136
			8090	825	1.60				7640	779	1.63	4	-	6125	-	21		B-101	B-117	B-136
69.0	394	40.2	9500	969	1.98	83.3	327	33.3	8960	913	2.05	4	-	6130	-	21		B-102	B-118	B-137
			9500	969	2.24				8960	913	2.51	4	-	6135	-	21		B-102	B-118	B-137
			14000	1430	2.89				13200	1350	2.89	4	-	6140	-	21		B-102	B-118	B-137
			8450	**861**	**1.03**				**7980**	**814**	**1.03**	**4**	**-**	**6120**	**-**	**25**		**B-101**	**B-117**	**B-136**
			8450	861	1.32				7980	814	1.32	4	-	6125	-	25		B-101	B-117	B-136
			9860	1010	1.66				9300	948	1.72	4	-	6130	-	25		B-102	B-118	B-137
58.0	469	47.8	9860	1010	1.92	70.0	389	39.6	9300	948	1.98	4	-	6135	-	25		B-102	B-118	B-137
			14700	1490	2.30				13900	1410	2.30	4	-	6140	-	25		B-102	B-118	B-137
			14700	1490	2.64				13900	1410	2.64	4	-	6145	-	25		B-102	B-118	B-137
			8750	**892**	**1.16**				**8280**	**844**	**1.26**	**4**	**-**	**6125**	**-**	**29**		**B-101**	**B-117**	**B-136**
			10400	1060	1.43				9770	996	1.49	4	-	6130	-	29		B-102	B-118	B-137
50.0	544	55.5	10400	1060	1.63	60.3	451	46.0	9770	996	1.88	4	-	6135	-	29		B-102	B-118	B-137
			15000	1530	1.98				14200	1450	1.98	4	-	6140	-	29		B-102	B-118	B-137
			15000	1530	2.51				14200	1450	2.51	4	-	6145	-	29		B-102	B-118	B-137
			9190	937	0.96				8700	887	1.06	4	-	6125	-	35		B-101	B-117	B-136
			10900	**1110**	**1.19**				**10300**	**1050**	**1.24**	**4**	**-**	**6130**	**-**	**35**		**B-102**	**B-118**	**B-137**
			10900	1110	1.37				10300	1050	1.42	4	-	6135	-	35		B-102	B-118	B-137
41.4	657	67.0	16000	1630	1.74	50.0	544	55.5	15200	1550	1.74	4	-	6140	-	35		B-102	B-118	B-137
			16000	1630	2.09				15200	1550	2.51	4	-	6145	-	35		B-102	B-118	B-137
			19100	1950	2.67				18000	1840	3.22	4	-	6160	-	35		B-103	B-119	B-138
			11600	**1180**	**1.12**				**11000**	**1120**	**1.26**	**4**	**-**	**6135**	**-**	**43**		**B-102**	**B-118**	**B-137**
			16000	1630	1.31				15800	1610	1.31	4	-	6140	-	43		B-102	B-118	B-137
33.7	807	82.3	16000	1630	1.56	40.7	669	68.2	15800	1610	1.80	4	-	6145	-	43		B-102	B-118	B-137
			20400	2080	2.15				19200	1960	2.48	4	-	6160	-	43		B-103	B-119	B-138
			20400	2080	2.60				19200	1960	2.64	4	-	6165	-	43		B-103	B-119	B-138
			12000	1220	0.85				11400	1160	0.98	4	-	6135	-	51		B-102	B-118	B-137
			16000	**1630**	**1.14**				**16000**	**1630**	**1.14**	**4**	**-**	**6140**	**-**	**51**		**B-102**	**B-118**	**B-137**
			16000	1630	1.23				16000	1630	1.41	4	-	6145	-	51		B-102	B-118	B-137
28.4	957	97.6	21200	2160	1.83	34.3	793	80.9	20000	2040	1.92	4	-	6160	-	51		B-103	B-119	B-138
			21200	2160	2.19				20000	2040	2.51	4	-	6165	-	51		B-103	B-119	B-138
			24100	2450	2.55				22700	2310	2.80	4	-	6170	-	51		B-103	B-119	B-138

6. "☆" indicates models manufactured with reducer and motor separately mounted on a common baseplate (horizontal shaft direction) or on an adaptor (vertical shaft direction). Consult us for details, including dimensions.
7. Allowable radial load (Pro) is the value at the midpoint of the slow speed shaft.
8. "(K)" indicates models with reduction ratios equal to nominal ratio. Refer to Table A-3 "6000SK Series (Actual Reduction Ratio)" on page A-4 for actual reduction ratio. Indicated reduction ratio is the same as actual reduction ratio for other models.
9. Maintain torque load during operation within "Output torque" in the table for models with "*" in the SF column. They cannot be operated with 100% motor rating.

Selection Tables Gearmotors

n_1: Motor Speed

3.0 kW	Hz	50Hz		60Hz	
	P	4	6	4	6
	n_1 r/min	1450	980	1750	1165

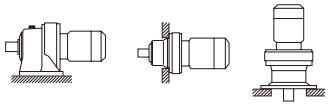

CHHM/CNHM CHFM/CNFM CVVM/CNVM

50Hz						60Hz						Nomenclature					Page of Dimension Sheet		
Output Speed n_2 [r/min]	Output Torque Tout [N·m]	[kgf·m]	Allowable Radial Load Pro [N]	[kgf]	SF	Output Speed n_2 [r/min]	Output Torque Tout [N·m]	[kgf·m]	Allowable Radial Load Pro [N]	[kgf]	SF	Input Capacity	- Symbol Frame Size	- Reduction Ratio	CNHM CHHM	CNFM CHFM	CNVM CVVM
			12600	1280	0.81				11900	1210	0.84	4	- 6135	- 59	B-102	B-118	B-137
			16000	1630	0.98				16000	1630	0.98	4	- 6140	- 59	B-102	B-118	B-137
			16000	**1630**	**1.06**				**16000**	**1630**	**1.22**	**4**	**- 6145**	**- 59**	**B-102**	**B-118**	**B-137**
24.6	1110	113	22100	2250	1.47	29.7	918	93.5	22100	2250	1.47	4	- 6160	- 59	B-103	B-119	B-138
			22100	2250	1.90				22100	2250	1.92	4	- 6165	- 59	B-103	B-119	B-138
			25200	2570	2.21				23800	2420	2.38	4	- 6170	- 59	B-103	B-119	B-138
			25200	2570	2.76				23800	2420	2.76	4	- 6175	- 59	B-103	B-119	B-138
			16000	1630	0.87				16000	1630	1.01	4	- 6145	- 71	B-102	B-118	B-137
			22100	**2250**	**1.16**				**22100**	**2250**	**1.16**	**4**	**- 6160**	**- 71**	**B-103**	**B-119**	**B-138**
			22100	2250	1.58				22100	2250	1.88	4	- 6165	- 71	B-103	B-119	B-138
20.4	1330	136	26700	2720	1.83	24.6	1100	113	25100	2560	1.97	4	- 6170	- 71	B-103	B-119	B-138
			26700	2720	2.33				25100	2560	2.38	4	- 6175	- 71	B-103	B-119	B-138
			35900	3650	2.93				33700	3440	2.93	4	- 6180	- 71	B-104	B-120	B-139
			22100	**2250**	**1.07**				**21900**	**2230**	**1.16**	**4**	**- 6160**	**- 87**	**B-103**	**B-119**	**B-138**
			22100	2250	1.26				21900	2230	1.30	4	- 6165	- 87	B-103	B-119	B-138
			28600	2910	1.52				26900	2750	1.60	4	- 6170	- 87	B-103	B-119	B-138
16.7	1630	166	28600	2910	1.87	20.1	1350	138	26900	2750	1.87	4	- 6175	- 87	B-103	B-119	B-138
			38600	3930	2.38				36300	3700	2.38	4	- 6180	- 87	B-104	B-120	B-139
			38600	3930	2.86				36300	3700	2.86	4	- 6185	- 87	B-104	B-120	B-139
			22100	2250	1.14				22100	2250	1.37	4	- 6165DC	- 104	B-111	B-127	B-146
			29500	3010	1.37				29200	2970	1.65	4	- 6170DC	- 104	B-111	B-127	B-146
			29500	3010	1.70				29200	2970	2.06	4	- 6175DC	- 104	B-111	B-127	B-146
13.9	1850	189	41100	4190	2.20	16.8	1530	156	38700	3940	2.65	4	- 6180DB	- 104	B-111	B-127	B-146
			41100	4190	2.65				38700	3940	3.20	4	- 6185DB	- 104	B-111	B-127	B-146
			57400	5850	2.32				53900	5500	2.32	4	- 6190DA	- 104	B-111	B-128	B-147
			57400	5850	2.32				53900	5500	2.32	4	- 6195DA	- 104	B-111	B-128	B-147
	1760	179	22100	2250	*		1760	179	22100	2250	*	4	- 6160DC	- 121	B-111	B-127	B-146
			22100	2250	0.98				22100	2250	1.18	4	- 6165DC	- 121	B-111	B-127	B-146
			29500	3010	1.18				29500	3010	1.42	4	- 6170DC	- 121	B-111	B-127	B-146
12.0	2150	219	29500	3010	1.46	14.5	1780	182	29500	3010	1.77	4	- 6175DC	- 121	B-111	B-127	B-146
			41700	4250	1.89				41200	4200	2.28	4	- 6180DB	- 121	B-111	B-127	B-146
			41700	4250	2.23				41200	4200	2.70	4	- 6185DB	- 121	B-111	B-127	B-146
			59000	6010	2.97				57500	5860	3.58	4	- 6190DB	- 121	B-112	B-128	B-147
	1760	179	22100	2250	*		1760	179	22100	2250	*	4	- 6160DC	- 143	B-111	B-127	B-146
	2100	214	22100	2250	*		2100	214	22100	2250	*	4	- 6165DC	- 143	B-111	B-127	B-146
			22100	2250	0.83				22100	2250	1.00	4	- 6165DC	- 143	B-111	B-127	B-146
			29500	3010	0.98				29500	3010	1.20	4	- 6170DC	- 143	B-111	B-127	B-146
			29500	3010	1.24				29500	3010	1.50	4	- 6175DC	- 143	B-111	B-127	B-146
10.1	2540	259	41700	4250	1.60	12.2	2110	215	41700	4250	1.93	4	- 6180DB	- 143	B-111	B-127	B-146
			41700	4250	1.93				41700	4250	2.33	4	- 6185DB	- 143	B-111	B-127	B-146
			59000	6010	1.97				59000	6010	1.97	4	- 6190DA	- 143	B-111	B-128	B-147
			59000	6010	2.51				59000	6010	3.03	4	- 6190DB	- 143	B-112	B-128	B-147
			59000	6010	3.00				59000	6010	3.62	4	- 6195DB	- 143	B-112	B-128	B-147

1. Combinations in **bold** are the recommended models for operations for 10 hours/day with uniform load (service factor is about 1.0 for motor rating at 50Hz).
2. Motor slippage may affect n_1 and n_2. Refer to technical data for details.
3. CNHM, CHHM, CNFM, CHFM, CNVM, and CVVM indicate types. Refer to page B-10 for details.
4. Lubrication method is different for each model. Refer to "Lubrication" section in page F-4~F-5 for details.
5. "6" at the end of "input capacity symbol" indicates models with 6P motor. Other models come with 4P motor.

Selection Tables Gearmotors

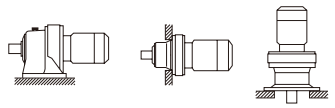

n_1: Motor Speed

3.0 kW	Hz	50Hz		60Hz	
	P	4	6	4	6
	n_1 r/min	1450	980	1750	1165

50Hz						60Hz						Nomenclature	Page of Dimension Sheet		
Output Speed n_2 [r/min]	Output Torque Tout [N·m]	[kgf·m]	Allowable Radial Load Pro [N]	[kgf]	SF	Output Speed n_2 [r/min]	Output Torque Tout [N·m]	[kgf·m]	Allowable Radial Load Pro [N]	[kgf]	SF	Input Capacity - Symbol Frame Size - Reduction Ratio	CNHM CHHM	CNFM CHFM	CNVM CVVM
8.79	2100	214	22100	2250	*	10.6	2100	214	22100	2250	*	4 - 6165DC - 165	B-111	B-127	B-146
	2930	299	29500	3010	1.07		2430	248	29500	3010	1.30	4 - 6175DC - 165	B-111	B-127	B-146
			41700	4250	1.38				41700	4250	1.67	4 - 6180DB - 165	B-111	B-127	B-146
			41700	4250	1.68				41700	4250	2.02	4 - 6185DB - 165	B-111	B-127	B-146
			59000	6010	1.97				59000	6010	1.97	4 - 6190DA - 165	B-111	B-128	B-147
			59000	6010	2.17				59000	6010	2.62	4 - 6190DB - 165	B-112	B-128	B-147
			59000	6010	2.70				59000	6010	3.25	4 - 6195DB - 165	B-112	B-128	B-147
7.44	2530	258	29500	3010	*	8.97	2530	258	29500	3010	*	4 - 6170DC - 195	B-111	B-127	B-146
	3470	353	29500	3010	0.91		2870	293	29500	3010	1.10	4 - 6175DC - 195	B-111	B-127	B-146
			41700	4250	1.17				41700	4250	1.41	4 - 6180DB - 195	B-111	B-127	B-146
			41700	4250	1.42				41700	4250	1.71	4 - 6185DB - 195	B-111	B-127	B-146
			59000	6010	1.84				59000	6010	1.97	4 - 6190DA - 195	B-111	B-128	B-147
			59000	6010	1.84				59000	6010	2.22	4 - 6190DB - 195	B-112	B-128	B-147
			59000	6010	1.88				59000	6010	1.97	4 - 6195DA - 195	B-111	B-128	B-147
			59000	6010	2.28				59000	6010	2.75	4 - 6195DB - 195	B-112	B-128	B-147
			84100	8570	2.67				84100	8570	3.23	4 - 6205DB - 195	B-112	B-129	B-148
6.28	2530	258	29500	3010	*	7.58	2530	258	29500	3010	*	4 - 6170DC - 231	B-111	B-127	B-146
	3150	321	29500	3010	*		3150	321	29500	3010	*	4 - 6175DC - 231	B-111	B-127	B-146
	4110	419	41700	4250	1.22		3400	347	41700	4250	1.47	4 - 6185DB - 231	B-111	B-127	B-146
			59000	6010	1.55				59000	6010	1.87	4 - 6190DA - 231	B-111	B-128	B-147
			59000	6010	1.94				59000	6010	1.97	4 - 6195DA - 231	B-111	B-128	B-147
			59000	6010	1.94				59000	6010	2.34	4 - 6195DB - 231	B-112	B-128	B-147
			84100	8570	2.26				84100	8570	2.72	4 - 6205DB - 231	B-112	B-129	B-148
5.31	3150	321	29500	3010	*	6.41	3150	321	29500	3010	*	4 - 6175DC - 273	B-111	B-127	B-146
	4850	495	**41700**	**4250**	**1.03**		4020	410	**41700**	**4250**	**1.24**	**4 - 6185DB - 273**	**B-111**	**B-127**	**B-146**
			59000	6010	1.31				59000	6010	1.59	4 - 6190DA - 273	B-111	B-128	B-147
			59000	6010	1.64				59000	6010	1.97	4 - 6195DA - 273	B-111	B-128	B-147
			84100	8570	1.72				84100	8570	1.95	4 - 6205DA - 273	B-112	B-129	B-148
			84100	8570	1.91				84100	8570	2.31	4 - 6205DB - 273	B-112	B-129	B-148
			104000	10600	2.57				104000	10600	3.11	4 - 6215DA - 273	B-112	B-129	B-148
4.55	4050	413	41700	4250	*	5.49	4050	413	41700	4250	*	4 - 6180DB - 319	B-111	B-127	B-146
	5670	578	41700	4250	0.88		4700	479	41700	4250	1.06	4 - 6185DB - 319	B-111	B-127	B-146
			59000	6010	1.12				59000	6010	1.36	4 - 6190DA - 319	B-111	B-128	B-147
			59000	6010	1.40				59000	6010	1.69	4 - 6195DA - 319	B-111	B-128	B-147
			84100	8570	1.42				84100	8570	1.61	4 - 6205DA - 319	B-112	B-129	B-148
			84100	8570	1.63				84100	8570	1.96	4 - 6205DB - 319	B-112	B-129	B-148
			104000	10600	2.23				104000	10600	2.69	4 - 6215DA - 319	B-112	B-129	B-148
			145000	14800	2.65				144000	14700	3.20	4 - 6225DA - 319	B-113	B-130	B-149
3.85	5000	510	41700	4250	*	4.64	5000	510	41700	4250	*	4 - 6185DB - 377	B-111	B-127	B-146
	6700	683	59000	6010	1.19		5550	566	59000	6010	1.43	4 - 6195DA - 377	B-111	B-128	B-147
			84100	8570	1.28				84100	8570	1.45	4 - 6205DA - 377	B-112	B-129	B-148
			84100	8570	1.38				84100	8570	1.66	4 - 6205DB - 377	B-112	B-129	B-148
			104000	10600	1.89				104000	10600	2.28	4 - 6215DA - 377	B-112	B-129	B-148
			145000	14800	2.24				145000	14800	2.71	4 - 6225DA - 377	B-113	B-130	B-149
			179000	18200	2.82				179000	18200	3.40	4 - 6235DA - 377	B-114	B-131	B-150
3.07	6380	650	59000	6010	*	3.70	6380	650	59000	6010	*	4 - 6190DA - 473	B-111	B-128	B-147
	8410	857	58800	6000	0.95		6970	710	59000	6010	1.14	4 - 6195DA - 473	B-111	B-128	B-147
			84100	8570	0.98				84100	8570	1.12	4 - 6205DA - 473	B-112	B-129	B-148
			84100	8570	1.11				84100	8570	1.33	4 - 6205DB - 473	B-112	B-129	B-148
			104000	10600	1.50				104000	10600	1.82	4 - 6215DA - 473	B-112	B-129	B-148
			145000	14800	1.90				145000	14800	2.30	4 - 6225DA - 473	B-113	B-130	B-149
			179000	18200	2.44				179000	18200	2.94	4 - 6235DA - 473	B-114	B-131	B-150

6. "☆" indicates models manufactured with reducer and motor separately mounted on a common baseplate (horizontal shaft direction) or on an adaptor (vertical shaft direction). Consult us for details, including dimensions.
7. Allowable radial load (Pro) is the value at the midpoint of the slow speed shaft.
8. "(K)" indicates models with reduction ratios equal to nominal ratio. Refer to Table A-3 "6000SK Series (Actual Reduction Ratio)" on page A-4 for actual reduction ratio. Indicated reduction ratio is the same as actual reduction ratio for other models.
9. Maintain torque load during operation within "Output torque" in the table for models with "*" in the SF column. They cannot be operated with 100% motor rating.

Selection Tables Gearmotors

n_1: Motor Speed

3.0 kW	Hz	50Hz		60Hz	
	P	4	6	4	6
	n_1 r/min	1450	980	1750	1165

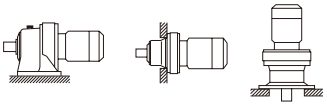

CHHM/CNHM CHFM/CNFM CVVM/CNVM

50Hz						60Hz						Nomenclature	Page of Dimension Sheet		
Output Speed n_2 [r/min]	Output Torque Tout [N·m]	[kgf·m]	Allowable Radial Load Pro [N]	[kgf]	SF	Output Speed n_2 [r/min]	Output Torque Tout [N·m]	[kgf·m]	Allowable Radial Load Pro [N]	[kgf]	SF	Input Capacity - Symbol Frame Size - Reduction Ratio	CNHM CHHM	CNFM CHFM	CNVM CVVM
2.59	6380	650	59000	6010	*	3.13	6380	650	59000	6010	*	4 - 6190DA - 559	B-111	B-128	B-147
	7960	811	59000	6010	*		7960	811	59000	6010	*	4 - 6195DA - 559	B-111	B-128	B-147
	8760	893	84100	8570	*		8230	839	84100	8570	*	4 - 6205DA - 559	B-112	B-129	B-148
	9940	1010	58400	5950	0.80		8240	840	58900	6000	0.97	4 - 6195DA - 559	B-111	B-128	B-147
			84100	8570	0.88				84100	8570	1.00	4 - 6205DA - 559	B-112	B-129	B-148
			84100	8570	0.94				84100	8570	1.13	4 - 6205DB - 559	B-112	B-129	B-148
			104000	10600	1.27				104000	10600	1.54	4 - 6215DA - 559	B-112	B-129	B-148
			145000	14800	1.61				145000	14800	1.94	4 - 6225DA - 559	B-113	B-130	B-149
			179000	18200	2.06				179000	18200	2.49	4 - 6235DA - 559	B-114	B-131	B-150
			208000	21200	2.60				208000	21200	3.13	4 - 6245DA - 559	B-114	B-131	B-150
2.23	7960	811	58100	5930	*	2.70	7960	811	58100	5930	*	4 - 6195DA - 649	B-111	B-128	B-147
	8300	846	84100	8570	*		7790	794	84100	8570	*	4 - 6205DA - 649	B-112	B-129	B-148
	11500	1180	84100	8570	0.81		9560	975	84100	8570	0.97	4 - 6205DB - 649	B-112	B-129	B-148
			104000	10600	1.10				104000	10600	1.32	4 - 6215DA - 649	B-112	B-129	B-148
			145000	14800	1.38				145000	14800	1.66	4 - 6225DA - 649	B-113	B-130	B-149
			179000	18200	1.78				179000	18200	2.14	4 - 6235DA - 649	B-114	B-131	B-150
			208000	21200	2.24				208000	21200	2.70	4 - 6245DA - 649	B-114	B-131	B-150
1.98	7960	811	59000	6010	*	2.39	7960	811	59000	6010	*	4 - 6195DA - 731	B-111	B-128	B-147
	9300	948	84100	8570	*		9060	923	84100	8570	*	4 - 6205DA - 731	B-112	B-129	B-148
	13000	1330	104000	10600	0.97		10800	1100	104000	10600	1.17	4 - 6215DA - 731	B-112	B-129	B-148
			145000	14800	1.23				145000	14800	1.49	4 - 6225DA - 731	B-113	B-130	B-149
			179000	18200	1.58				179000	18200	1.90	4 - 6235DA - 731	B-114	B-131	B-150
			208000	21200	1.98				208000	21200	2.40	4 - 6245DA - 731	B-114	B-131	B-150
1.72	9230	941	84100	8570	*	2.08	9230	941	84100	8570	*	4 - 6205DA - 841	B-112	B-129	B-148
	15000	1520	104000	10600	0.85		12400	1260	104000	10600	1.02	4 - 6215DA - 841	B-112	B-129	B-148
			145000	**14800**	**1.01**				**145000**	**14800**	**1.21**	**4 - 6225DA - 841**	**B-113**	**B-130**	**B-149**
			179000	18200	1.26				179000	18200	1.53	4 - 6235DA - 841	B-114	B-131	B-150
			208000	21200	1.73				208000	21200	2.08	4 - 6245DA - 841	B-114	B-131	B-150
1.45	12700	1290	104000	10600	*	1.74	12700	1290	104000	10600	*	4 - 6215DA - 1003	B-112	B-129	B-148
	17800	1820	145000	14800	0.89		14800	1510	145000	14800	1.07	4 - 6225DA - 1003	B-113	B-130	B-149
			179000	18200	1.15				179000	18200	1.39	4 - 6235DA - 1003	B-114	B-131	B-150
			208000	21200	1.45				208000	21200	1.75	4 - 6245DA - 1003	B-114	B-131	B-150
1.16	16000	1630	145000	14800	*	1.40	16000	1630	145000	14800	*	4 - 6225DA - 1247	B-113	B-130	B-149
	22200	2260	179000	18200	0.92		18400	1870	179000	18200	1.12	4 - 6235DA - 1247	B-114	B-131	B-150
			208000	21200	1.16				208000	21200	1.40	4 - 6245DA - 1247	B-114	B-131	B-150
0.980	17200	1750	179000	18200	*	1.18	17200	1750	179000	18200	*	4 - 6235DA - 1479	B-114	B-131	B-150
	26300	2680	208000	21200	0.86		21800	2220	208000	21200	1.04	4 - 6245DA - 1479	B-114	B-131	B-150
0.784	20500	2090	179000	18200	*	0.946	20500	2090	179000	18200	*	4 - 6235DA - 1849	B-114	B-131	B-150
	25800	2630	208000	21200	*		25800	2630	208000	21200	*	4 - 6245DA - 1849	B-114	B-131	B-150
0.702	25800	2630	208000	21200	*	0.847	25800	2630	208000	21200	*	4 - 6245DA - 2065	B-114	B-131	B-150

1. Combinations in **bold** are the recommended models for operations for 10 hours/day with uniform load (service factor is about 1.0 for motor rating at 50Hz).
2. Motor slippage may affect n_1 and n_2. Refer to technical data for details.
3. CNHM, CHHM, CNFM, CHFM, CNVM, and CVVM indicate types. Refer to page B-10 for details.
4. Lubrication method is different for each model. Refer to "Lubrication" section in page F-4~F-5 for details.
5. "6" at the end of "input capacity symbol" indicates models with 6P motor. Other models come with 4P motor.

Selection Tables Gearmotors

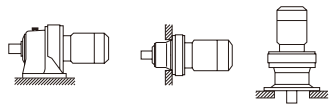

3.7 kW

n_1: Motor Speed

Hz	50Hz		60Hz	
P	4	6	4	6
n_1 r/min	1450	980	1750	1165

50Hz						60Hz						Nomenclature	Page of Dimension Sheet		
Output Speed n_2 [r/min]	Output Torque Tout [N·m]	[kgf·m]	Allowable Radial Load Pro [N]	[kgf]	SF	Output Speed n_2 [r/min]	Output Torque Tout [N·m]	[kgf·m]	Allowable Radial Load Pro [N]	[kgf]	SF	Input Capacity Symbol – Frame Size – Reduction Ratio	CNHM CHHM	CNFM CHFM	CNVM CVVM
			1820	**186**	**1.01**				**1790**	**182**	**1.01**	**5 - 6105SK - 2.5 (K)**	**B-99**	**-**	**B-134**
580	57.9	5.90	2620	267	1.39	700	48.0	4.89	2500	255	1.39	5 - 6110SK - 2.5 (K)	B-99	-	B-134
			2620	267	1.74				2500	255	1.74	5 - 6115SK - 2.5 (K)	B-99	-	B-134
			1850	**189**	**1.05**				**1810**	**185**	**1.05**	**5 - 6105SK - 3 (K)**	**B-99**	**-**	**B-134**
483	69.5	7.08	2770	282	1.43	583	57.5	5.87	2650	270	1.43	5 - 6110SK - 3 (K)	B-99	-	B-134
			2770	282	1.78				2650	270	1.78	5 - 6115SK - 3 (K)	B-99	-	B-134
			1960	**200**	**1.02**				**1940**	**198**	**1.02**	**5 - 6105SK - 4 (K)**	**B-99**	**-**	**B-134**
363	92.6	9.44	2920	298	1.45	438	76.7	7.82	2820	287	1.45	5 - 6110SK - 4 (K)	B-99	-	B-134
			2920	298	1.81				2820	287	1.81	5 - 6115SK - 4 (K)	B-99	-	B-134
			2010	**205**	**1.00**				**2000**	**204**	**1.00**	**5 - 6105SK - 5 (K)**	**B-99**	**-**	**B-134**
290	116	11.8	3040	310	1.25	350	95.9	9.78	2930	299	1.25	5 - 6110SK - 5 (K)	B-99	-	B-134
			3040	310	1.56				2930	299	1.56	5 - 6115SK - 5 (K)	B-99	-	B-134
			1960	200	0.85				1970	201	0.85	5 - 6105SK - 6 (K)	B-99	-	B-134
			3160	**322**	**1.14**				**3060**	**312**	**1.14**	**5 - 6110SK - 6 (K)**	**B-99**	**-**	**B-134**
			3160	322	1.43				3060	312	1.43	5 - 6115SK - 6 (K)	B-99	-	B-134
242	139	14.2	**4580**	**467**	**1.06**	292	115	11.7	**4320**	**440**	**1.06**	**5 - 6115 - 6**	**B-101**	**B-117**	**B-136**
			5210	531	1.37				4910	500	1.37	5 - 6120 - 6	B-101	B-117	B-136
			5210	531	1.88				4910	500	1.57	5 - 6125 - 6	B-101	B-117	B-136
			6120	624	2.54				5760	587	2.54	5 - 6130 - 6	B-102	B-118	B-137
			3260	**332**	**1.00**				**3190**	**325**	**1.00**	**5 - 6110SK - 8 (K)**	**B-99**	**-**	**B-134**
			3260	332	1.25				3190	325	1.25	5 - 6115SK - 8 (K)	B-99	-	B-134
181	185	18.9	**5090**	**519**	**1.06**	219	153	15.6	**4800**	**489**	**1.06**	**5 - 6115 - 8**	**B-101**	**B-117**	**B-136**
			5800	591	1.37				5470	557	1.37	5 - 6120 - 8	B-101	B-117	B-136
			5800	591	1.88				5470	557	1.88	5 - 6125 - 8	B-101	B-117	B-136
			6820	695	2.54				6420	655	2.54	5 - 6130 - 8	B-102	B-118	B-137
145	232	23.6	**3360**	**343**	**1.03**	175	192	19.6	**3330**	**339**	**1.03**	**5 - 6115SK - 10 (K)**	**B-99**	**-**	**B-134**
			5780	**589**	**1.06**				**5460**	**557**	**1.06**	**5 - 6115 - 11**	**B-101**	**B-117**	**B-136**
132	255	26.0	6580	670	1.37	159	211	21.5	6200	632	1.37	5 - 6120 - 11	B-101	B-117	B-136
			6580	670	1.60				6200	632	1.60	5 - 6125 - 11	B-101	B-117	B-136
			7770	792	2.54				7320	746	2.54	5 - 6130 - 11	B-102	B-118	B-137
			5960	**608**	**1.05**				**5640**	**574**	**1.05**	**5 - 6115 - 13**	**B-101**	**B-117**	**B-136**
			6780	691	1.37				6400	652	1.37	5 - 6120 - 13	B-101	B-117	B-136
112	301	30.7	6780	691	1.60	135	249	25.4	6400	652	1.60	5 - 6125 - 13	B-101	B-117	B-136
			8080	824	2.54				7620	776	2.54	5 - 6130 - 13	B-102	B-118	B-137
			8080	824	2.76				7620	776	3.05	5 - 6135 - 13	B-102	B-118	B-137
			6330	**646**	**1.05**				**5990**	**611**	**1.05**	**5 - 6115 - 15**	**B-101**	**B-117**	**B-136**
			7260	741	1.37				6860	699	1.37	5 - 6120 - 15	B-101	B-117	B-136
96.7	347	35.4	7260	741	1.60	117	288	29.3	6860	699	1.60	5 - 6125 - 15	B-101	B-117	B-136
			8250	841	2.10				7770	792	2.10	5 - 6130 - 15	B-102	B-118	B-137
			8250	841	2.42				7770	792	2.42	5 - 6135 - 15	B-102	B-118	B-137
			6380	**650**	**1.05**				**6040**	**616**	**1.05**	**5 - 6115 - 17**	**B-101**	**B-117**	**B-136**
			7320	747	1.32				6920	705	1.37	5 - 6120 - 17	B-101	B-117	B-136
85.3	394	40.1	7320	747	1.53	103	326	33.2	6920	705	1.53	5 - 6125 - 17	B-101	B-117	B-136
			8850	902	1.96				8340	850	1.96	5 - 6130 - 17	B-102	B-118	B-137
			8850	902	2.24				8340	850	2.24	5 - 6135 - 17	B-102	B-118	B-137
			13100	1330	2.73				12300	1260	2.73	5 - 6140 - 17	B-102	B-118	B-137
			5010	511	0.84				6350	647	0.84	5 - 6115 - 21	B-101	B-117	B-136
			8010	**816**	**1.07**				**7570**	**772**	**1.07**	**5 - 6120 - 21**	**B-101**	**B-117**	**B-136**
			8010	816	1.29				7570	772	1.32	5 - 6125 - 21	B-101	B-117	B-136
69.0	486	49.6	9440	962	1.61	83.3	403	41.1	8900	908	1.66	5 - 6130 - 21	B-102	B-118	B-137
			9440	962	1.82				8900	908	2.04	5 - 6135 - 21	B-102	B-118	B-137
			14000	1420	2.34				13200	1350	2.34	5 - 6140 - 21	B-102	B-118	B-137
			14000	1420	2.56				13200	1350	2.97	5 - 6145 - 21	B-102	B-118	B-137

6. "☆" indicates models manufactured with reducer and motor separately mounted on a common baseplate (horizontal shaft direction) or on an adaptor (vertical shaft direction). Consult us for details, including dimensions.
7. Allowable radial load (Pro) is the value at the midpoint of the slow speed shaft.
8. "(K)" indicates models with reduction ratios equal to nominal ratio. Refer to Table A-3 "6000SK Series (Actual Reduction Ratio)" on page A-4 for actual reduction ratio. Indicated reduction ratio is the same as actual reduction ratio for other models.
9. Maintain torque load during operation within "Output torque" in the table for models with "*" in the SF column. They cannot be operated with 100% motor rating.

Selection Tables Gearmotors

n_1: Motor Speed

3.7 kW	Hz	50Hz		60Hz	
	P	4	6	4	6
	n_1 r/min	1450	980	1750	1165

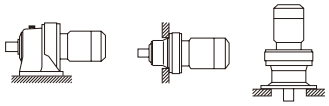

CHHM/CNHM CHFM/CNFM CVVM/CNVM

50Hz						60Hz						Nomenclature				Page of Dimension Sheet		
Output Speed n_2 [r/min]	Output Torque Tout [N·m]	[kgf·m]	Allowable Radial Load Pro [N]	[kgf]	SF	Output Speed n_2 [r/min]	Output Torque Tout [N·m]	[kgf·m]	Allowable Radial Load Pro [N]	[kgf]	SF	Input Capacity Symbol	–	Frame Size	– Reduction Ratio	CNHM CHHM	CNFM CHFM	CNVM CVVM
			8350	**851**	**1.07**				**7900**	**806**	**1.07**	**5**	**-**	**6125**	**- 25**	**B-101**	**B-117**	**B-136**
			9790	998	1.35				9240	942	1.39	5	-	6130	- 25	B-102	B-118	B-137
58.0	579	59.0	9790	998	1.55	70.0	480	48.9	9240	942	1.61	5	-	6135	- 25	B-102	B-118	B-137
			14600	1490	1.86				13800	1410	1.86	5	-	6140	- 25	B-102	B-118	B-137
			14600	1490	2.14				13800	1410	2.14	5	-	6145	- 25	B-102	B-118	B-137
			17200	1760	2.66				16200	1650	2.66	5	-	6160	- 25	B-103	B-119	B-138
			8640	880	0.94				8180	834	1.02	5	-	6125	- 29	B-101	B-117	B-136
			10300	**1050**	**1.16**				**9700**	**989**	**1.21**	**5**	**-**	**6130**	**- 29**	**B-102**	**B-118**	**B-137**
50.0	671	68.4	10300	1050	1.32	60.3	556	56.7	9700	989	1.52	5	-	6135	- 29	B-102	B-118	B-137
			14900	1520	1.61				14200	1440	1.61	5	-	6140	- 29	B-102	B-118	B-137
			14900	1520	2.04				14200	1440	2.04	5	-	6145	- 29	B-102	B-118	B-137
			18000	1830	2.58				16900	1730	2.84	5	-	6160	- 29	B-103	B-119	B-138
			10800	**1100**	**1.11**				**10200**	**1040**	**1.15**	**5**	**-**	**6135**	**- 35**	**B-102**	**B-118**	**B-137**
			16000	1630	1.41				15100	1540	1.41	5	-	6140	- 35	B-102	B-118	B-137
41.4	810	82.6	16000	1630	1.69	50.0	671	68.4	15100	1540	2.04	5	-	6145	- 35	B-102	B-118	B-137
			19100	1940	2.16				17900	1830	2.61	5	-	6160	- 35	B-103	B-119	B-138
			19100	1940	2.59				17900	1830	3.08	5	-	6165	- 35	B-103	B-119	B-138
			11500	1170	0.91				10900	1110	1.02	5	-	6135	- 43	B-102	B-118	B-137
			16000	**1630**	**1.06**				**15800**	**1610**	**1.06**	**5**	**-**	**6140**	**- 43**	**B-102**	**B-118**	**B-137**
33.7	995	101	16000	1630	1.26	40.7	825	84.1	15800	1610	1.46	5	-	6145	- 43	B-102	B-118	B-137
			20300	2070	1.74				19200	1950	2.01	5	-	6160	- 43	B-103	B-119	B-138
			20300	2070	2.11				19200	1950	2.14	5	-	6165	- 43	B-103	B-119	B-138
			23000	2350	2.45				21700	2210	2.64	5	-	6170	- 43	B-103	B-119	B-138
			16000	**1630**	**1.00**				**16000**	**1630**	**1.14**	**5**	**-**	**6145**	**- 51**	**B-102**	**B-118**	**B-137**
			21100	2150	1.49				19900	2030	1.55	5	-	6160	- 51	B-103	B-119	B-138
28.4	1180	120	21100	2150	1.78	34.3	978	99.7	19900	2030	2.04	5	-	6165	- 51	B-103	B-119	B-138
			24000	2440	2.07				22600	2300	2.27	5	-	6170	- 51	B-103	B-119	B-138
			24000	2440	2.67				22600	2300	3.05	5	-	6175	- 51	B-103	B-119	B-138
			16000	1630	0.86				16000	1630	0.98	5	-	6145	- 59	B-102	B-118	B-137
			22100	**2250**	**1.19**				**22100**	**2250**	**1.19**	**5**	**-**	**6160**	**- 59**	**B-103**	**B-119**	**B-138**
24.6	1370	139	22100	2250	1.54	29.7	1130	115	22100	2250	1.55	5	-	6165	- 59	B-103	B-119	B-138
			25100	2560	1.79				23700	2410	1.93	5	-	6170	- 59	B-103	B-119	B-138
			25100	2560	2.24				23700	2410	2.24	5	-	6175	- 59	B-103	B-119	B-138
			33600	3430	2.64				31600	3220	2.64	5	-	6180	- 59	B-104	B-120	B-139
			22100	2250	1.28				21900	2240	1.53	5	-	6165	- 71	B-103	B-119	B-138
			26500	2710	1.49				25000	2550	1.60	5	-	6170	- 71	B-103	B-119	B-138
20.4	1640	168	26500	2710	1.89	24.6	1360	139	25000	2550	1.93	5	-	6175	- 71	B-103	B-119	B-138
			35700	3640	2.38				33600	3430	2.38	5	-	6180	- 71	B-104	B-120	B-139
			35700	3640	2.65				33600	3430	2.65	5	-	6185	- 71	B-104	B-120	B-139
			21800	**2230**	**1.02**				**21800**	**2220**	**1.05**	**5**	**-**	**6165**	**- 87**	**B-103**	**B-119**	**B-138**
			28400	2890	1.24				26800	2730	1.30	5	-	6170	- 87	B-103	B-119	B-138
16.7	2010	205	28400	2890	1.52	20.1	1670	170	26800	2730	1.52	5	-	6175	- 87	B-103	B-119	B-138
			38400	3920	1.93				36200	3690	1.93	5	-	6180	- 87	B-104	B-120	B-139
			38400	3920	2.32				36200	3690	2.32	5	-	6185	- 87	B-104	B-120	B-139
	1760	179	22100	2250	*		1760	179	22100	2250	*	5	-	6160DC	- 104	B-111	B-127	B-146
			22100	2250	0.92				22100	2250	1.11	5	-	6165DC	- 104	B-111	B-127	B-146
			29500	3010	1.11				29000	2960	1.34	5	-	6170DC	- 104	B-111	B-127	B-146
13.9	2280	233	29500	3010	1.38	16.8	1890	193	29000	2960	1.67	5	-	6175DC	- 104	B-111	B-127	B-146
			40900	4170	1.78				38500	3930	2.15	5	-	6180DB	- 104	B-111	B-127	B-146
			40900	4170	2.15				38500	3930	2.59	5	-	6185DB	- 104	B-111	B-127	B-146
			57200	5830	2.80				53800	5490	3.22	5	-	6190DB	- 104	B-112	B-128	B-147

1. Combinations in **bold** are the recommended models for operations for 10 hours/day with uniform load (service factor is about 1.0 for motor rating at 50Hz).
2. Motor slippage may affect n_1 and n_2. Refer to technical data for details.
3. CNHM, CHHM, CNFM, CHFM, CNVM, and CVVM indicate types. Refer to page B-10 for details.
4. Lubrication method is different for each model. Refer to "Lubrication" section in page F-4~F-5 for details.
5. "6" at the end of "input capacity symbol" indicates models with 6P motor. Other models come with 4P motor.

Selection Tables Gearmotors

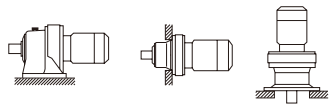

n_1: Motor Speed

3.7 kW	Hz	50Hz		60Hz	
	P	4	6	4	6
	n_1 r/min	1450	980	1750	1165

50Hz						60Hz						Nomenclature	Page of Dimension Sheet		
Output Speed n_2 [r/min]	Output Torque Tout [N·m]	[kgf·m]	Allowable Radial Load Pro [N]	[kgf]	SF	Output Speed n_2 [r/min]	Output Torque Tout [N·m]	[kgf·m]	Allowable Radial Load Pro [N]	[kgf]	SF	Input Capacity Symbol - Frame Size - Reduction Ratio	CNHM CHHM	CNFM CHFM	CNVM CVVM
12.0	2100	214	22100	2250	*	14.5	2100	214	22100	2250	*	5 - 6165DC - 121	B-111	B-127	B-146
	2650	271	29500	3010	1.19		2200	224	29500	3010	1.43	5 - 6175DC - 121	B-111	B-127	B-146
			41700	4250	1.53				41000	4180	1.85	5 - 6180DB - 121	B-111	B-127	B-146
			41700	4250	1.81				41000	4180	2.19	5 - 6185DB - 121	B-111	B-127	B-146
			59000	6010	2.40				57300	5840	2.90	5 - 6190DB - 121	B-112	B-128	B-147
			59000	6010	2.86				57300	5840	3.05	5 - 6195DB - 121	B-112	B-128	B-147
10.1	2530	258	29500	3010	*	12.2	2530	258	29500	3010	*	5 - 6170DC - 143	B-111	B-127	B-146
	3140	320	**29500**	**3010**	**1.00**		2600	265	**29500**	**3010**	**1.21**	**5 - 6175DC - 143**	**B-111**	**B-127**	**B-146**
			41700	4250	1.29				41700	4250	1.56	5 - 6180DB - 143	B-111	B-127	B-146
			41700	4250	1.56				41700	4250	1.89	5 - 6185DB - 143	B-111	B-127	B-146
			59000	6010	1.60				59000	6010	1.60	5 - 6190DA - 143	B-111	B-128	B-147
			59000	6010	2.03				59000	6010	2.46	5 - 6190DB - 143	B-112	B-128	B-147
			59000	6010	2.43				59000	6010	2.94	5 - 6195DB - 143	B-112	B-128	B-147
8.79	2530	258	29500	3010	*	10.6	2530	258	29500	3010	*	5 - 6170DC - 165	B-111	B-127	B-146
	3620	369	29500	3010	0.87		3000	306	29500	3010	1.05	5 - 6175DC - 165	B-111	B-127	B-146
			41700	4250	1.12				41700	4250	1.35	5 - 6180DB - 165	B-111	B-127	B-146
			41700	4250	1.36				41700	4250	1.64	5 - 6185DB - 165	B-111	B-127	B-146
			59000	6010	1.60				59000	6010	1.60	5 - 6190DA - 165	B-111	B-128	B-147
			59000	6010	1.76				59000	6010	2.13	5 - 6190DB - 165	B-112	B-128	B-147
			59000	6010	2.19				59000	6010	2.64	5 - 6195DB - 165	B-112	B-128	B-147
			84100	8570	2.56				84100	8570	3.09	5 - 6205DB - 165	B-112	B-129	B-148
7.44	3150	321	29500	3010	*	8.97	3150	321	29500	3010	*	5 - 6175DC - 195	B-111	B-127	B-146
	4280	436	41700	4250	1.15		3540	361	41700	4250	1.39	5 - 6185DB - 195	B-111	B-127	B-146
			59000	6010	1.49				59000	6010	1.60	5 - 6190DA - 195	B-111	B-128	B-147
			59000	6010	1.49				59000	6010	1.80	5 - 6190DB - 195	B-112	B-128	B-147
			59000	6010	1.52				59000	6010	1.60	5 - 6195DA - 195	B-111	B-128	B-147
			59000	6010	1.85				59000	6010	2.23	5 - 6195DB - 195	B-112	B-128	B-147
			84100	8570	2.17				84100	8570	2.62	5 - 6205DB - 195	B-112	B-129	B-148
			104000	10600	2.76				104000	10600	3.05	5 - 6215DA - 195	B-112	B-129	B-148
			104000	10600	2.85				104000	10600	3.43	5 - 6215DB - 195	B-113	B-130	B-149
			131000	13400	2.92				124000	12600	3.05	5 - 6225DA - 195	B-113	B-130	B-149
6.28	4050	413	41700	4250	*	7.58	4050	413	41700	4250	*	5 - 6180DB - 231	B-111	B-127	B-146
	5070	516	41700	4250	0.98		4200	428	41700	4250	1.19	5 - 6185DB - 231	B-111	B-127	B-146
			59000	6010	1.26				59000	6010	1.52	5 - 6190DA - 231	B-111	B-128	B-147
			59000	6010	1.57				59000	6010	1.60	5 - 6195DA - 231	B-111	B-128	B-147
			59000	6010	1.57				59000	6010	1.90	5 - 6195DB - 231	B-112	B-128	B-147
			84100	8570	1.83				84100	8570	2.21	5 - 6205DB - 231	B-112	B-129	B-148
			104000	10600	2.47				104000	10600	2.98	5 - 6215DA - 231	B-112	B-129	B-148
			140000	14200	2.92				132000	13500	3.05	5 - 6225DA - 231	B-113	B-130	B-149
			140000	14200	2.92				132000	13500	3.53	5 - 6225DB - 231	B-113	B-130	B-149

6. "☆" indicates models manufactured with reducer and motor separately mounted on a common baseplate (horizontal shaft direction) or on an adaptor (vertical shaft direction). Consult us for details, including dimensions.
7. Allowable radial load (Pro) is the value at the midpoint of the slow speed shaft.
8. "(K)" indicates models with reduction ratios equal to nominal ratio. Refer to Table A-3 "6000SK Series (Actual Reduction Ratio)" on page A-4 for actual reduction ratio. Indicated reduction ratio is the same as actual reduction ratio for other models.
9. Maintain torque load during operation within "Output torque" in the table for models with "*" in the SF column. They cannot be operated with 100% motor rating.

Selection Tables Gearmotors

n_1: Motor Speed

3.7 kW	Hz	50Hz		60Hz	
	P	4	6	4	6
	n_1 r/min	1450	980	1750	1165

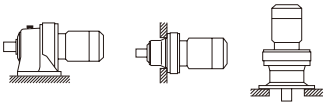

CHHM/CNHM CHFM/CNFM CVVM/CNVM

50Hz						60Hz						Nomenclature	Page of Dimension Sheet		
Output Speed n_2 [r/min]	Output Torque Tout [N·m]	[kgf·m]	Allowable Radial Load Pro [N]	[kgf]	SF	Output Speed n_2 [r/min]	Output Torque Tout [N·m]	[kgf·m]	Allowable Radial Load Pro [N]	[kgf]	SF	Input Capacity Symbol - Frame Size - Reduction Ratio	CNHM CHHM	CNFM CHFM	CNVM CVVM
	4050	413	41700	4250	*		4050	413	41700	4250	*	5 - 6180DB - 273	B-111	B-127	B-146
			41700	4250	0.84				41700	4250	1.01	5 - 6185DB - 273	B-111	B-127	B-146
			59000	**6010**	**1.07**				**59000**	**6010**	**1.29**	**5 - 6190DA - 273**	**B-111**	**B-128**	**B-147**
			59000	6010	1.33				59000	6010	1.60	5 - 6195DA - 273	B-111	B-128	B-147
5.31	5990	610	84100	8570	1.40	6.41	4960	506	84100	8570	1.58	5 - 6205DA - 273	B-112	B-129	B-148
			84100	8570	1.55				84100	8570	1.87	5 - 6205DB - 273	B-112	B-129	B-148
			104000	10600	2.09				104000	10600	2.52	5 - 6215DA - 273	B-112	B-129	B-148
			145000	14800	2.47				139000	14100	2.98	5 - 6225DA - 273	B-113	B-130	B-149
	5000	510	41700	4250	*		5000	510	41700	4250	*	5 - 6185DB - 319	B-111	B-127	B-146
			59000	6010	1.14				59000	6010	1.37	5 - 6195DA - 319	B-111	B-128	B-147
			84100	8570	1.15				84100	8570	1.31	5 - 6205DA - 319	B-112	B-129	B-148
4.55	7000	713	84100	8570	1.32	5.49	5800	591	84100	8570	1.59	5 - 6205DB - 319	B-112	B-129	B-148
			104000	10600	1.81				104000	10600	2.18	5 - 6215DA - 319	B-112	B-129	B-148
			145000	14800	2.15				144000	14700	2.59	5 - 6225DA - 319	B-113	B-130	B-149
			179000	18200	2.70				179000	18200	3.26	5 - 6235DA - 319	B-114	B-131	B-150
	6380	650	59000	6010	*		6380	650	59000	6010	*	5 - 6190DA - 377	B-111	B-128	B-147
			58900	6010	0.96				59000	6010	1.16	5 - 6195DA - 377	B-111	B-128	B-147
			84100	**8570**	**1.03**				**84100**	**8570**	**1.17**	**5 - 6205DA - 377**	**B-112**	**B-129**	**B-148**
3.85	8270	843	84100	8570	1.12	4.64	6850	698	84100	8570	1.35	5 - 6205DB - 377	B-112	B-129	B-148
			104000	10600	1.53				104000	10600	1.85	5 - 6215DA - 377	B-112	B-129	B-148
			145000	14800	1.82				145000	14800	2.20	5 - 6225DA - 377	B-113	B-130	B-149
			179000	18200	2.29				179000	18200	2.76	5 - 6235DA - 377	B-114	B-131	B-150
	7960	811	59000	6010	*		7960	811	59000	6010	*	5 - 6195DA - 473	B-111	B-128	B-147
	8280	844	84100	8570	*		7780	793	84100	8570	*	5 - 6205DA - 473	B-112	B-129	B-148
			84100	8570	0.80				84100	8570	0.90	5 - 6205DA - 473	B-112	B-129	B-148
			84100	8570	0.90				84100	8570	1.08	5 - 6205DB - 473	B-112	B-129	B-148
3.07	10400	1060	104000	10600	1.22	3.70	8600	876	104000	10600	1.47	5 - 6215DA - 473	B-112	B-129	B-148
			145000	14800	1.54				145000	14800	1.86	5 - 6225DA - 473	B-113	B-130	B-149
			179000	18200	1.98				179000	18200	2.38	5 - 6235DA - 473	B-114	B-131	B-150
			208000	21200	2.49				208000	21200	3.00	5 - 6245DA - 473	B-114	B-131	B-150
			104000	**10600**	**1.03**				**104000**	**10600**	**1.25**	**5 - 6215DA - 559**	**B-112**	**B-129**	**B-148**
			145000	14800	1.31				145000	14800	1.58	5 - 6225DA - 559	B-113	B-130	B-149
2.59	12300	1250	179000	18200	1.67	3.13	10200	1040	179000	18200	2.02	5 - 6235DA - 559	B-114	B-131	B-150
			208000	21200	2.10				208000	21200	2.54	5 - 6245DA - 559	B-114	B-131	B-150
			258000	26300	2.81				258000	26300	3.40	5 - 6255DA - 559	B-115	B-132	B-151
			104000	10600	0.89				104000	10600	1.07	5 - 6215DA - 649	B-112	B-129	B-148
			145000	14800	1.12				145000	14800	1.35	5 - 6225DA - 649	B-113	B-130	B-149
2.23	14200	1450	179000	18200	1.44	2.70	11800	1200	179000	18200	1.74	5 - 6235DA - 649	B-114	B-131	B-150
			208000	21200	1.81				208000	21200	2.19	5 - 6245DA - 649	B-114	B-131	B-150
			258000	26300	2.42				258000	26300	2.93	5 - 6255DA - 649	B-115	B-132	B-151
	12700	1290	104000	10600	*		12700	1290	104000	10600	*	5 - 6215DA - 731	B-112	B-129	B-148
			145000	**14800**	**1.00**				**145000**	**14800**	**1.20**	**5 - 6225DA - 731**	**B-113**	**B-130**	**B-149**
1.98	16000	1630	179000	18200	1.28	2.39	13300	1350	179000	18200	1.54	5 - 6235DA - 731	B-114	B-131	B-150
			208000	21200	1.61				208000	21200	1.94	5 - 6245DA - 731	B-114	B-131	B-150
			258000	26300	2.15				258000	26300	2.60	5 - 6255DA - 731	B-115	B-132	B-151
	12700	1290	104000	10600	*		12700	1290	104000	10600	*	5 - 6215DA - 841	B-112	B-129	B-148
	15000	1530	145000	14800	*		15000	1530	145000	14800	*	5 - 6225DA - 841	B-113	B-130	B-149
			145000	14800	0.82				145000	14800	0.98	5 - 6225DA - 841	B-113	B-130	B-149
1.72	18400	1880	**179000**	**18200**	**1.02**	2.08	15300	1560	**179000**	**18200**	**1.24**	**5 - 6235DA - 841**	**B-114**	**B-131**	**B-150**
			208000	21200	1.40				208000	21200	1.69	5 - 6245DA - 841	B-114	B-131	B-150
			258000	26300	1.76				258000	26300	2.13	5 - 6255DA - 841	B-115	B-132	B-151
	15900	1620	145000	14800	*		15900	1620	145000	14800	*	5 - 6225DA - 1003	B-113	B-130	B-149
			179000	18200	0.93				179000	18200	1.12	5 - 6235DA - 1003	B-114	B-131	B-150
1.45	22000	2240	208000	21200	1.17	1.74	18200	1860	208000	21200	1.42	5 - 6245DA - 1003	B-114	B-131	B-150
			258000	26300	1.57				258000	26300	1.89	5 - 6255DA - 1003	B-115	B-132	B-151

1. Combinations in **bold** are the recommended models for operations for 10 hours/day with uniform load (service factor is about 1.0 for motor rating at 50Hz).
2. Motor slippage may affect n_1 and n_2. Refer to technical data for details.
3. CNHM, CHHM, CNFM, CHFM, CNVM, and CVVM indicate types. Refer to page B-10 for details.
4. Lubrication method is different for each model. Refer to "Lubrication" section in page F-4~F-5 for details.
5. "6" at the end of "input capacity symbol" indicates models with 6P motor. Other models come with 4P motor.

Selection Tables Gearmotors

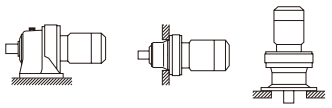

n_1: Motor Speed

3.7 kW	Hz	50Hz		60Hz	
	P	4	6	4	6
	n_1 r/min	1450	980	1750	1165

50Hz						60Hz						Nomenclature	Page of Dimension Sheet		
Output Speed n_2 [r/min]	Output Torque Tout [N·m]	[kgf·m]	Allowable Radial Load Pro [N]	[kgf]	SF	Output Speed n_2 [r/min]	Output Torque Tout [N·m]	[kgf·m]	Allowable Radial Load Pro [N]	[kgf]	SF	Input Capacity Symbol - Frame Size - Reduction Ratio	CNHM CHHM	CNFM CHFM	CNVM CVVM
1.16	20500	2090	179000	18200	*	1.40	20500	2090	179000	18200	*	5 - 6235DA - 1247	B-114	B-131	B-150
	27300	2790	208000	21200	0.94		22700	2310	208000	21200	1.14	5 - 6245DA - 1247	B-114	B-131	B-150
			258000	26300	1.26				258000	26300	1.52	5 - 6255DA - 1247	B-115	B-132	B-151
0.980	22600	2310	208000	21200	*	1.18	22600	2310	208000	21200	*	5 - 6245DA - 1479	B-114	B-131	B-150
	32400	3310	258000	26300	0.96		26900	2740	258000	26300	1.15	5 - 6255DA - 1479	B-115	B-132	B-151
0.784	40600	4130	258000	26300	0.85	0.946	33600	3430	258000	26300	1.03	5 - 6255DA - 1849	B-115	B-132	B-151
0.702	34500	3520	258000	26300	*	0.847	34500	3520	258000	26300	*	5 - 6255DA - 2065	B-115	B-132	B-151
0.572	34500	3520	258000	26300	*	0.690	34500	3520	258000	26300	*	5 - 6255DA - 2537	B-115	B-132	B-151
0.476	31000	3160	258000	26300	*	0.575	31000	3160	258000	26300	*	5 - 6255DA - 3045	B-115	B-132	B-151
0.417	34500	3520	258000	26300	*	0.503	34500	3520	258000	26300	*	5 - 6255DA - 3481	B-115	B-132	B-151
0.327	31000	3160	258000	26300	*	0.394	31000	3160	258000	26300	*	5 - 6255DA - 4437	B-115	B-132	B-151
0.282	34500	3520	258000	26300	*	0.341	34500	3520	258000	26300	*	5 - 6255DA - 5133	B-115	B-132	B-151
0.235	31000	3160	258000	26300	*	0.283	31000	3160	258000	26300	*	5 - 6255DA - 6177	B-115	B-132	B-151
0.192	31000	3160	258000	26300	*	0.231	31000	3160	258000	26300	*	5 - 6255DA - 7569	B-115	B-132	B-151

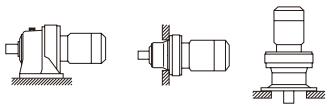

n_1: Motor Speed

5.5 kW	Hz	50Hz		60Hz	
	P	4	6	4	6
	n_1 r/min	1450	980	1750	1165

50Hz						60Hz						Nomenclature	Page of Dimension Sheet		
Output Speed n_2 [r/min]	Output Torque Tout [N·m]	[kgf·m]	Allowable Radial Load Pro [N]	[kgf]	SF	Output Speed n_2 [r/min]	Output Torque Tout [N·m]	[kgf·m]	Allowable Radial Load Pro [N]	[kgf]	SF	Input Capacity Symbol - Frame Size - Reduction Ratio	CNHM CHHM	CNFM CHFM	CNVM CVVM
580	86.0	8.77	**2410**	**246**	**1.17**	700	71.3	7.27	**2330**	**238**	**1.17**	**8 - 6115SK - 2.5 (K)**	**B-99**	**-**	**B-134**
483	103	10.5	**2530**	**258**	**1.20**	583	85.5	8.72	**2450**	**250**	**1.20**	**8 - 6115SK - 3 (K)**	**B-99**	**-**	**B-134**
363	138	14.0	**2640**	**269**	**1.22**	438	114	11.6	**2580**	**263**	**1.22**	**8 - 6115SK - 4 (K)**	**B-99**	**-**	**B-134**
290	172	17.5	**2690**	**274**	**1.05**	350	143	14.5	**2640**	**269**	**1.05**	**8 - 6115SK - 5 (K)**	**B-99**	**-**	**B-134**
242	206	21.0	2710	276	0.96	292	171	17.4	2700	275	0.96	8 - 6115SK - 6 (K)	B-99	-	B-134
			5140	**524**	**1.27**				**4850**	**494**	**1.06**	**8 - 6125 - 6**	**B-101**	**B-117**	**B-136**
			6060	617	1.71				5710	582	1.71	8 - 6130 - 6	B-102	B-118	B-137
			6060	617	2.05				5710	582	2.05	8 - 6135 - 6	B-102	B-118	B-137
			9370	955	2.36				8860	903	2.36	8 - 6140 - 6	B-102	B-118	B-137
			9370	955	2.75				8860	903	2.75	8 - 6145 - 6	B-102	B-118	B-137
181	275	28.1	2680	273	0.84	219	228	23.3	2710	276	0.84	8 - 6115SK - 8 (K)	B-99	-	B-134
			5710	**582**	**1.26**				**5400**	**550**	**1.26**	**8 - 6125 - 8**	**B-101**	**B-117**	**B-136**
			6740	687	1.71				6360	648	1.71	8 - 6130 - 8	B-102	B-118	B-137
			6740	687	2.05				6360	648	2.05	8 - 6135 - 8	B-102	B-118	B-137
			10400	1060	2.36				9820	1000	2.36	8 - 6140 - 8	B-102	B-118	B-137
			10400	1060	2.75				9820	1000	2.75	8 - 6145 - 8	B-102	B-118	B-137
132	379	38.6	**6450**	**658**	**1.08**	159	314	32.0	**6100**	**622**	**1.08**	**8 - 6125 - 11**	**B-101**	**B-117**	**B-136**
			7680	783	1.71				7240	739	1.71	8 - 6130 - 11	B-102	B-118	B-137
			7680	783	2.05				7240	739	2.05	8 - 6135 - 11	B-102	B-118	B-137
			11600	1190	2.36				11000	1120	2.36	8 - 6140 - 11	B-102	B-118	B-137
			11600	1190	2.75				11000	1120	2.75	8 - 6145 - 11	B-102	B-118	B-137

6. "☆" indicates models manufactured with reducer and motor separately mounted on a common baseplate (horizontal shaft direction) or on an adaptor (vertical shaft direction). Consult us for details, including dimensions.
7. Allowable radial load (Pro) is the value at the midpoint of the slow speed shaft.
8. "(K)" indicates models with reduction ratios equal to nominal ratio. Refer to Table A-3 "6000SK Series (Actual Reduction Ratio)" on page A-4 for actual reduction ratio. Indicated reduction ratio is the same as actual reduction ratio for other models.
9. Maintain torque load during operation within "Output torque" in the table for models with "*" in the SF column. They cannot be operated with 100% motor rating.

Selection Tables Gearmotors

n_1: Motor Speed

5.5 kW	Hz	50Hz		60Hz	
	P	4	6	4	6
	n_1 r/min	1450	980	1750	1165

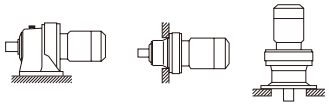

CHHM/CNHM CHFM/CNFM CVVM/CNVM

50Hz						60Hz						Nomenclature				Page of Dimension Sheet		
Output Speed n_2 [r/min]	Output Torque Tout [N·m]	[kgf·m]	Allowable Radial Load Pro [N]	[kgf]	SF	Output Speed n_2 [r/min]	Output Torque Tout [N·m]	[kgf·m]	Allowable Radial Load Pro [N]	[kgf]	SF	Input Capacity Symbol	-	Frame Size	- Reduction Ratio	CNHM CHHM	CNFM CHFM	CNVM CVVM
			6630	**676**	**1.08**				**6280**	**640**	**1.08**	**8**	**-**	**6125**	**- 13**	**B-101**	**B-117**	**B-136**
			7980	814	1.71				7530	768	1.71	8	-	6130	- 13	B-102	B-118	B-137
112	447	45.6	7980	814	1.85	135	371	37.8	7530	768	2.05	8	-	6135	- 13	B-102	B-118	B-137
			11900	1210	2.36				11300	1150	2.36	8	-	6140	- 13	B-102	B-118	B-137
			11900	1210	2.75				11300	1150	2.75	8	-	6145	- 13	B-102	B-118	B-137
			7100	**724**	**1.08**				**6730**	**686**	**1.08**	**8**	**-**	**6125**	**- 15**	**B-101**	**B-117**	**B-136**
			8130	829	1.41				7680	783	1.41	8	-	6130	- 15	B-102	B-118	B-137
96.7	516	52.6	8130	829	1.63	117	428	43.6	7680	783	1.63	8	-	6135	- 15	B-102	B-118	B-137
			12400	1270	2.18				11800	1200	2.18	8	-	6140	- 15	B-102	B-118	B-137
			12400	1270	2.64				11800	1200	2.75	8	-	6145	- 15	B-102	B-118	B-137
			7150	**729**	**1.03**				**6780**	**691**	**1.03**	**8**	**-**	**6125**	**- 17**	**B-101**	**B-117**	**B-136**
			8710	888	1.32				8230	839	1.32	8	-	6130	- 17	B-102	B-118	B-137
			8710	888	1.51				8230	839	1.51	8	-	6135	- 17	B-102	B-118	B-137
85.3	585	59.6	13000	1320	1.84	103	485	49.4	12300	1250	1.84	8	-	6140	- 17	B-102	B-118	B-137
			13000	1320	2.18				12300	1250	2.18	8	-	6145	- 17	B-102	B-118	B-137
			15300	1550	2.38				14400	1460	2.38	8	-	6160	- 17	B-103	B-119	B-138
			7780	793	0.87				7390	753	0.89	8	-	6125	- 21	B-101	B-117	B-136
			9260	**944**	**1.08**				**8760**	**893**	**1.12**	**8**	**-**	**6130**	**- 21**	**B-102**	**B-118**	**B-137**
			9260	944	1.22				8760	893	1.37	8	-	6135	- 21	B-102	B-118	B-137
69.0	723	73.7	13900	1410	1.57	83.3	599	61.0	13100	1340	1.57	8	-	6140	- 21	B-102	B-118	B-137
			13900	1410	1.73				13100	1340	2.00	8	-	6145	- 21	B-102	B-118	B-137
			16400	1670	2.35				15400	1570	2.35	8	-	6160	- 21	B-103	B-119	B-138
			16400	1670	2.91				15400	1570	2.93	8	-	6165	- 21	B-103	B-119	B-138
			9580	**977**	**1.05**				**9070**	**925**	**1.08**	**8**	**-**	**6135**	**- 25**	**B-102**	**B-118**	**B-137**
			14500	1480	1.25				13800	1400	1.25	8	-	6140	- 25	B-102	B-118	B-137
			14500	1480	1.44				13800	1400	1.44	8	-	6145	- 25	B-102	B-118	B-137
58.0	860	87.7	17100	1740	1.79	70.0	713	72.7	16100	1640	1.79	8	-	6160	- 25	B-103	B-119	B-138
			17100	1740	2.44				16100	1640	2.75	8	-	6165	- 25	B-103	B-119	B-138
			19200	1960	2.84				18100	1840	2.87	8	-	6170	- 25	B-103	B-119	B-138
			10000	1020	0.89				9500	968	1.03	8	-	6135	- 29	B-102	B-118	B-137
			14800	**1510**	**1.08**				**14100**	**1430**	**1.08**	**8**	**-**	**6140**	**- 29**	**B-102**	**B-118**	**B-137**
			14800	1510	1.37				14100	1430	1.37	8	-	6145	- 29	B-102	B-118	B-137
50.0	998	102	17800	1810	1.74	60.3	827	84.3	16800	1710	1.91	8	-	6160	- 29	B-103	B-119	B-138
			17800	1810	2.07				16800	1710	2.07	8	-	6165	- 29	B-103	B-119	B-138
			20200	2060	2.45				19100	1940	2.60	8	-	6170	- 29	B-103	B-119	B-138
			15900	1620	1.14				15000	1530	1.37	8	-	6145	- 35	B-102	B-118	B-137
			18800	1920	1.46				17800	1810	1.76	8	-	6160	- 35	B-103	B-119	B-138
41.4	1200	123	18800	1920	1.74	50.0	998	102	17800	1810	2.07	8	-	6165	- 35	B-103	B-119	B-138
			21400	2180	2.04				20200	2060	2.18	8	-	6170	- 35	B-103	B-119	B-138
			21400	2180	2.62				20200	2060	2.75	8	-	6175	- 35	B-103	B-119	B-138
			15100	1540	0.85				15600	1590	0.98	8	-	6145	- 43	B-102	B-118	B-137
			20000	2040	1.17				18900	1930	1.35	8	-	6160	- 43	B-103	B-119	B-138
			20000	2040	1.42				18900	1930	1.44	8	-	6165	- 43	B-103	B-119	B-138
33.7	1480	151	22800	2320	1.65	40.7	1230	125	21500	2190	1.77	8	-	6170	- 43	B-103	B-119	B-138
			22800	2320	2.05				21500	2190	2.05	8	-	6175	- 43	B-103	B-119	B-138
			30900	3150	2.75				29100	2960	2.75	8	-	6180	- 43	B-104	B-120	B-139
			20800	**2120**	**1.00**				**19600**	**2000**	**1.05**	**8**	**-**	**6160**	**- 51**	**B-103**	**B-119**	**B-138**
			20800	2120	1.20				19600	2000	1.37	8	-	6165	- 51	B-103	B-119	B-138
			23700	2420	1.39				22400	2280	1.53	8	-	6170	- 51	B-103	B-119	B-138
28.4	1760	179	23700	2420	1.79	34.3	1450	148	22400	2280	2.05	8	-	6175	- 51	B-103	B-119	B-138
			31900	3260	2.18				30100	3070	2.18	8	-	6180	- 51	B-104	B-120	B-139
			31900	3260	2.75				30100	3070	2.75	8	-	6185	- 51	B-104	B-120	B-139

1. Combinations in **bold** are the recommended models for operations for 10 hours/day with uniform load (service factor is about 1.0 for motor rating at 50Hz).
2. Motor slippage may affect n_1 and n_2. Refer to technical data for details.
3. CNHM, CHHM, CNFM, CHFM, CNVM, and CVVM indicate types. Refer to page B-10 for details.
4. Lubrication method is different for each model. Refer to "Lubrication" section in page F-4~F-5 for details.
5. "6" at the end of "input capacity symbol" indicates models with 6P motor. Other models come with 4P motor.

Selection Tables Gearmotors

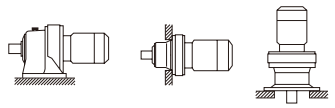

n_1: Motor Speed

5.5 kW	Hz	50Hz		60Hz	
	P	4	6	4	6
	n_1 r/min	1450	980	1750	1165

50Hz						60Hz						Nomenclature						Page of Dimension Sheet		
Output Speed n_2 [r/min]	Output Torque Tout [N·m]	[kgf·m]	Allowable Radial Load Pro [N]	[kgf]	SF	Output Speed n_2 [r/min]	Output Torque Tout [N·m]	[kgf·m]	Allowable Radial Load Pro [N]	[kgf]	SF	Input Capacity Symbol	-	Frame Size	-	Reduction Ratio		CNHM CHHM	CNFM CHFM	CNVM CVVM
			22100	**2250**	**1.03**				**21700**	**2220**	**1.05**	**8**	**-**	**6165**	**-**	**59**		**B-103**	**B-119**	**B-138**
			24800	2530	1.20				23400	2390	1.30	8	-	6170	-	59		B-103	B-119	B-138
			24800	2530	1.51				23400	2390	1.51	8	-	6175	-	59		B-103	B-119	B-138
24.6	2030	207	33400	3400	1.77	29.7	1680	171	31400	3200	1.77	8	-	6180	-	59		B-104	B-120	B-139
			33400	3400	2.18				31400	3200	2.18	8	-	6185	-	59		B-104	B-120	B-139
			47000	4790	2.78				44200	4500	2.78	8	-	6190	-	59		B-104	B-120	B-139
			22100	2250	0.86				21600	2200	1.03	8	-	6165	-	71		B-103	B-119	B-138
			26200	**2670**	**1.00**				**24700**	**2520**	**1.08**	**8**	**-**	**6170**	**-**	**71**		**B-103**	**B-119**	**B-138**
			26200	2670	1.27				24700	2520	1.30	8	-	6175	-	71		B-103	B-119	B-138
20.4	2440	249	35500	3620	1.60	24.6	2020	206	33400	3410	1.60	8	-	6180	-	71		B-104	B-120	B-139
			35500	3620	1.78				33400	3410	1.78	8	-	6185	-	71		B-104	B-120	B-139
			49800	5080	2.45				46900	4780	2.45	8	-	6190	-	71		B-104	B-120	B-139
			49800	5080	2.84				46900	4780	2.84	8	-	6195	-	71		B-104	B-120	B-139
			27900	**2840**	**1.02**				**26400**	**2690**	**1.02**	**8**	**-**	**6175**	**-**	**87**		**B-103**	**B-119**	**B-138**
			38100	3880	1.30				35900	3660	1.30	8	-	6180	-	87		B-104	B-120	B-139
16.7	2990	305	38100	3880	1.56	20.1	2480	253	35900	3660	1.56	8	-	6185	-	87		B-104	B-120	B-139
			53600	5470	2.13				50500	5140	2.15	8	-	6190	-	87		B-104	B-120	B-139
			53600	5470	2.47				50500	5140	2.47	8	-	6195	-	87		B-104	B-120	B-139
	2100	214	22100	2250	*		2100	214	22100	2250	*	8	-	6165DC	-	104		B-111	B-127	B-146
	2530	258	29500	3010	*		2530	258	28600	2920	*	8	-	6170DC	-	104		B-111	B-127	B-146
			29500	3010	0.93				28500	2900	1.12	8	-	6175DC	-	104		B-111	B-127	B-146
13.9			40500	4130	1.20	16.8			38200	3890	1.45	8	-	6180DB	-	104		B-111	B-127	B-146
	3390	346	40500	4130	1.45		2810	286	38200	3890	1.74	8	-	6185DB	-	104		B-111	B-127	B-146
			56800	5790	1.88				53500	5460	2.05	8	-	6190DB	-	104		B-112	B-128	B-147
			56800	5790	2.05				53500	5460	2.05	8	-	6195DB	-	104		B-112	B-128	B-147
	2530	258	29500	3010	*		2530	258	29500	3010	*	8	-	6170DC	-	121		B-111	B-127	B-146
	3150	321	29500	3010	*		3150	321	29500	3010	*	8	-	6175DC	-	121		B-111	B-127	B-146
			29500	3010	0.80				29500	3010	0.96	8	-	6175DC	-	121		B-111	B-127	B-146
			41700	**4250**	**1.03**				**40600**	**4140**	**1.24**	**8**	**-**	**6180DB**	**-**	**121**		**B-111**	**B-127**	**B-146**
12.0			41700	4250	1.22	14.5			40600	4140	1.47	8	-	6185DB	-	121		B-111	B-127	B-146
	3940	402	59000	6010	1.62		3270	333	57000	5810	1.95	8	-	6190DB	-	121		B-112	B-128	B-147
			59000	6010	1.92				57000	5810	2.05	8	-	6195DB	-	121		B-112	B-128	B-147
			84100	8570	2.05				84100	8570	2.05	8	-	6205DB	-	121		B-112	B-129	B-148
			104000	10600	2.88				103000	10500	3.48	8	-	6215DB	-	121		B-113	B-130	B-149
	3150	321	29500	3010	*		3150	321	29500	3010	*	8	-	6175DC	-	143		B-111	B-127	B-146
			41700	**4250**	**1.05**				**41700**	**4250**	**1.27**	**8**	**-**	**6185DB**	**-**	**143**		**B-111**	**B-127**	**B-146**
10.1	4660	475	59000	6010	1.08	12.2	3860	394	59000	6010	1.08	8	-	6190DA	-	143		B-111	B-128	B-147
			59000	6010	1.37				59000	6010	1.65	8	-	6190DB	-	143		B-112	B-128	B-147
			59000	6010	1.64				59000	6010	1.97	8	-	6195DB	-	143		B-112	B-128	B-147
	3150	321	29500	3010	*		3150	321	29500	3010	*	8	-	6175DC	-	165		B-111	B-127	B-146
	4060	414	41700	4250	*		4060	414	**41700**	4250	*	8	-	6180DB	-	165		B-111	B-127	B-146
			41700	4250	0.92				41700	4250	1.10	8	-	6185DB	-	165		B-111	B-127	B-146
			59000	**6010**	**1.08**				**59000**	**6010**	**1.08**	**8**	**-**	**6190DA**	**-**	**165**		**B-111**	**B-128**	**B-147**
			59000	6010	1.19				59000	6010	1.43	8	-	6190DB	-	165		B-112	B-128	B-147
8.79	5380	548	59000	6010	1.47	10.6	4460	454	59000	6010	1.77	8	-	6195DB	-	165		B-112	B-128	B-147
			84100	8570	1.72				84100	8570	2.05	8	-	6205DB	-	165		B-112	B-129	B-148
			104000	10600	2.05				104000	10600	2.05	8	-	6215DA	-	165		B-112	B-129	B-148
			104000	10600	2.26				104000	10600	2.73	8	-	6215DB	-	165		B-113	B-130	B-149
			124000	12700	2.69				118000	12000	3.25	8	-	6225DB	-	165		B-113	B-130	B-149

6. "☆" indicates models manufactured with reducer and motor separately mounted on a common baseplate (horizontal shaft direction) or on an adaptor (vertical shaft direction). Consult us for details, including dimensions.
7. Allowable radial load (Pro) is the value at the midpoint of the slow speed shaft.
8. "(K)" indicates models with reduction ratios equal to nominal ratio. Refer to Table A-3 "6000SK Series (Actual Reduction Ratio)" on page A-4 for actual reduction ratio. Indicated reduction ratio is the same as actual reduction ratio for other models.
9. Maintain torque load during operation within "Output torque" in the table for models with "*" in the SF column. They cannot be operated with 100% motor rating.

Selection Tables Gearmotors

n_1: Motor Speed

5.5 kW	Hz	50Hz		60Hz	
	P	4	6	4	6
	n_1 r/min	1450	980	1750	1165

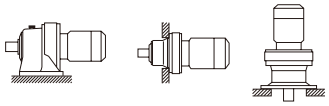

CHHM/CNHM CHFM/CNFM CVVM/CNVM

50Hz						60Hz						Nomenclature	Page of Dimension Sheet		
Output Speed n_2 [r/min]	Output Torque Tout [N·m]	[kgf·m]	Allowable Radial Load Pro [N]	[kgf]	SF	Output Speed n_2 [r/min]	Output Torque Tout [N·m]	[kgf·m]	Allowable Radial Load Pro [N]	[kgf]	SF	Input Capacity Symbol - Frame Size - Reduction Ratio	CNHM CHHM	CNFM CHFM	CNVM CVVM
	4060	414	41700	4250	*		4060	414	41700	4250	*	8 - 6180DB - 195	B-111	B-127	B-146
	4920	502	41700	4250	*		4920	502	41700	4250	*	8 - 6185DB - 195	B-111	B-127	B-146
			58900	**6000**	**1.00**				**59000**	**6010**	**1.08**	**8 - 6190DA - 195**	**B-111**	**B-128**	**B-147**
			58900	6000	1.00				59000	6010	1.21	8 - 6190DB - 195	B-112	B-128	B-147
			58900	6000	1.02				59000	6010	1.08	8 - 6195DA - 195	B-111	B-128	B-147
7.44			58900	6000	1.24	8.97			59000	6010	1.50	8 - 6195DB - 195	B-112	B-128	B-147
	6360	648	84100	8570	1.46		5270	537	84100	8570	1.76	8 - 6205DB - 195	B-112	B-129	B-148
			104000	10600	1.86				104000	10600	2.08	8 - 6215DA - 195	B-112	B-129	B-148
			104000	10600	1.91				104000	10600	2.31	8 - 6215DB - 195	B-113	B-130	B-149
			131000	13300	1.86				124000	12600	2.08	8 - 6225DA - 195	B-113	B-130	B-149
			131000	13300	2.28				124000	12600	2.75	8 - 6225DB - 195	B-113	B-130	B-149
	5000	510	41700	4250	*		5000	510	41700	4250	*	8 - 6185DB - 231	B-111	B-127	B-146
			59000	**6010**	**1.06**				**59000**	**6010**	**1.08**	**8 - 6195DA - 231**	**B-111**	**B-128**	**B-147**
			59000	6010	1.06				59000	6010	1.28	8 - 6195DB - 231	B-112	B-128	B-147
			84100	8570	1.23				84100	8570	1.49	8 - 6205DB - 231	B-112	B-129	B-148
6.28	7530	768	104000	10600	1.66	7.58	6240	636	104000	10600	2.00	8 - 6215DA - 231	B-112	B-129	B-148
			139000	14200	1.97				132000	13400	2.08	8 - 6225DA - 231	B-113	B-130	B-149
			139000	14200	1.97				132000	13400	2.37	8 - 6225DB - 231	B-113	B-130	B-149
			173000	17700	2.51				164000	16700	3.03	8 - 6235DA - 231	B-114	B-131	B-150
	5000	510	41700	4250	*		5000	510	41700	4250	*	8 - 6185DB - 273	B-111	B-127	B-146
	6380	650	59000	6010	*		6380	650	59000	6010	*	8 - 6190DA - 273	B-111	B-128	B-147
			59000	6010	0.89				59000	6010	1.08	8 - 6195DA - 273	B-111	B-128	B-147
			84100	8570	0.94				84100	8570	1.07	8 - 6205DA - 273	B-112	B-129	B-148
5.31			**84100**	**8570**	**1.04**	6.41			**84100**	**8570**	**1.26**	**8 - 6205DB - 273**	**B-112**	**B-129**	**B-148**
	8900	907	104000	10600	1.40		7370	752	104000	10600	1.70	8 - 6215DA - 273	B-112	B-129	B-148
			145000	14800	1.66				138000	14100	2.01	8 - 6225DA - 273	B-113	B-130	B-149
			179000	18200	2.12				172000	17600	2.56	8 - 6235DA - 273	B-114	B-131	B-150
			203000	20600	2.90				192000	19500	3.50	8 - 6245DA - 273	B-114	B-131	B-150
	6380	650	59000	6010	*		6380	650	59000	6010	*	8 - 6190DA - 319	B-111	B-128	B-147
	7960	811	59000	6010	*		7960	811	59000	6010	*	8 - 6195DA - 319	B-111	B-128	B-147
	8080	823	84100	8570	*		7590	773	84100	8570	*	8 - 6205DA - 319	B-112	B-129	B-148
			84100	8570	0.89				84100	8570	1.07	8 - 6205DB - 319	B-112	B-129	B-148
4.55			104000	10600	1.22	5.49			104000	10600	1.47	8 - 6215DA - 319	B-112	B-129	B-148
	10400	1060	145000	14800	1.45		8620	878	143000	14600	1.75	8 - 6225DA - 319	B-113	B-130	B-149
			179000	18200	1.82				179000	18200	2.19	8 - 6235DA - 319	B-114	B-131	B-150
			208000	21200	2.48				200000	20400	2.99	8 - 6245DA - 319	B-114	B-131	B-150
	7960	811	59000	6010	*		7960	811	59000	6010	*	8 - 6195DA - 377	B-111	B-128	B-147
	8550	872	84100	8570	*		8030	819	84100	8570	*	8 - 6205DA - 377	B-112	B-129	B-148
			104000	**10600**	**1.03**				**104000**	**10600**	**1.24**	**8 - 6215DA - 377**	**B-112**	**B-129**	**B-148**
3.85			145000	14800	1.22	4.64			145000	14800	1.48	8 - 6225DA - 377	B-113	B-130	B-149
	12300	1250	179000	18200	1.54		10200	1040	179000	18200	1.86	8 - 6235DA - 377	B-114	B-131	B-150
			208000	21200	2.10				208000	21200	2.53	8 - 6245DA - 377	B-114	B-131	B-150
			258000	26300	2.64				258000	26300	3.19	8 - 6255DA - 377	B-115	B-132	B-151

1. Combinations in **bold** are the recommended models for operations for 10 hours/day with uniform load (service factor is about 1.0 for motor rating at 50Hz).
2. Motor slippage may affect n_1 and n_2. Refer to technical data for details.
3. CNHM, CHHM, CNFM, CHFM, CNVM, and CVVM indicate types. Refer to page B-10 for details.
4. Lubrication method is different for each model. Refer to "Lubrication" section in page F-4~F-5 for details.
5. "6" at the end of "input capacity symbol" indicates models with 6P motor. Other models come with 4P motor.

Selection Tables Gearmotors

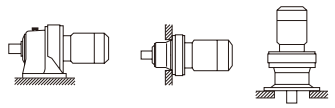

5.5 kW

n_1: Motor Speed

Hz	50Hz		60Hz	
P	4	6	4	6
n_1 r/min	1450	980	1750	1165

50Hz						60Hz						Nomenclature	Page of Dimension Sheet		
Output Speed n_2 [r/min]	Output Torque Tout [N·m]	[kgf·m]	Allowable Radial Load Pro [N]	[kgf]	SF	Output Speed n_2 [r/min]	Output Torque Tout [N·m]	[kgf·m]	Allowable Radial Load Pro [N]	[kgf]	SF	Input Capacity Symbol - Frame Size - Reduction Ratio	CNHM CHHM	CNFM CHFM	CNVM CVVM
3.07	12700	1290	104000	10600	*	3.70	12700	1290	104000	10600	*	8 - 6215DA - 473	B-112	B-129	B-148
	15400	1570	104000	10600	0.82		12800	1300	104000	10600	0.98	8 - 6215DA - 473	B-112	B-129	B-148
			145000	**14800**	**1.04**				**145000**	**14800**	**1.25**	**8 - 6225DA - 473**	**B-113**	**B-130**	**B-149**
			179000	18200	1.33				179000	18200	1.60	8 - 6235DA - 473	B-114	B-131	B-150
			208000	21200	1.67				208000	21200	2.02	8 - 6245DA - 473	B-114	B-131	B-150
			258000	26300	2.24				258000	26300	2.70	8 - 6255DA - 473	B-115	B-132	B-151
			276000	28100	2.98				276000	28100	3.60	8 - 6265DA - 473	B-115	B-132	B-151
2.59	12700	1290	104000	10600	*	3.13	12700	1290	104000	10600	*	8 - 6215DA - 559	B-112	B-129	B-148
	18200	1860	145000	14800	0.88		15100	1540	145000	14800	1.06	8 - 6225DA - 559	B-113	B-130	B-149
			179000	18200	1.12				179000	18200	1.36	8 - 6235DA - 559	B-114	B-131	B-150
			208000	21200	1.42				208000	21200	1.71	8 - 6245DA - 559	B-114	B-131	B-150
			258000	26300	1.89				258000	26300	2.28	8 - 6255DA - 559	B-115	B-132	B-151
			276000	28100	2.52				276000	28100	3.05	8 - 6265DA - 559	B-115	B-132	B-151
2.23	12700	1290	104000	10600	*	2.70	12700	1290	104000	10600	*	8 - 6215DA - 649	B-112	B-129	B-148
	15900	1620	145000	14800	*		15900	1620	145000	14800	*	8 - 6225DA - 649	B-113	B-130	B-149
	21200	2160	179000	18200	0.97		17500	1790	179000	18200	1.17	8 - 6235DA - 649	B-114	B-131	B-150
			208000	21200	1.22				208000	21200	1.47	8 - 6245DA - 649	B-114	B-131	B-150
			258000	26300	1.63				258000	26300	1.97	8 - 6255DA - 649	B-115	B-132	B-151
			276000	28100	2.17				276000	28100	2.62	8 - 6265DA - 649	B-115	B-132	B-151
1.98	16000	1630	145000	14800	*	2.39	16000	1630	145000	14800	*	8 - 6225DA - 731	B-113	B-130	B-149
	23800	2430	179000	18200	0.86		19700	2010	179000	18200	1.04	8 - 6235DA - 731	B-114	B-131	B-150
			208000	21200	1.08				208000	21200	1.31	8 - 6245DA - 731	B-114	B-131	B-150
			258000	26300	1.45				258000	26300	1.75	8 - 6255DA - 731	B-115	B-132	B-151
			276000	28100	1.93				276000	28100	2.33	8 - 6265DA - 731	B-115	B-132	B-151
1.72	18900	1930	179000	18200	*	2.08	18900	1930	179000	18200	*	8 - 6235DA - 841	B-114	B-131	B-150
	27400	2790	208000	21200	0.94		22700	2320	208000	21200	1.14	8 - 6245DA - 841	B-114	B-131	B-150
			258000	26300	1.18				258000	26300	1.43	8 - 6255DA - 841	B-115	B-132	B-151
			276000	28100	1.68				276000	28100	2.02	8 - 6265DA - 841	B-115	B-132	B-151
1.45	20500	2090	179000	18200	*	1.74	20500	2090	179000	18200	*	8 - 6235DA - 1003	B-114	B-131	B-150
	25800	2630	208000	21200	*		25800	2630	208000	21200	*	8 - 6245DA - 1003	B-114	B-131	B-150
	32700	3330	**258000**	**26300**	**1.06**		27100	2760	**258000**	**26300**	**1.27**	**8 - 6255DA - 1003**	**B-115**	**B-132**	**B-151**
			276000	28100	1.41				276000	28100	1.70	8 - 6265DA - 1003	B-115	B-132	B-151
1.16	25800	2630	208000	21200	*	1.40	25800	2630	208000	21200	*	8 - 6245DA - 1247	B-114	B-131	B-150
	40700	4140	258000	26300	0.85		33700	3430	258000	26300	1.02	8 - 6255DA - 1247	B-115	B-132	B-151
			276000	28100	1.13				276000	28100	1.37	8 - 6265DA - 1247	B-115	B-132	B-151
0.980	31000	3160	258000	26300	*	1.18	31000	3160	258000	26300	*	8 - 6255DA - 1479	B-115	B-132	B-151
	48200	4920	276000	28100	0.91		40000	4070	276000	28100	1.10	8 - 6265DA - 1479	B-115	B-132	B-151
0.784	34500	3520	258000	26300	*	0.946	34500	3520	258000	26300	*	8 - 6255DA - 1849	B-115	B-132	B-151
	46000	4690	276000	28100	*		46000	4690	276000	28100	*	8 - 6265DA - 1849	B-115	B-132	B-151
0.702	46000	4690	276000	28100	*	0.847	46000	4690	276000	28100	*	8 - 6265DA - 2065	B-115	B-132	B-151
0.572	46000	4690	276000	28100	*	0.690	46000	4690	276000	28100	*	8 - 6265DA - 2537	B-115	B-132	B-151
0.476	44000	4490	276000	28100	*	0.575	44000	4490	276000	28100	*	8 - 6265DA - 3045	B-115	B-132	B-151
0.417	46000	4690	276000	28100	*	0.503	46000	4690	276000	28100	*	8 - 6265DA - 3481	B-115	B-132	B-151
0.327	44000	4490	276000	28100	*	0.394	44000	4490	276000	28100	*	8 - 6265DA - 4437	B-115	B-132	B-151
0.282	46000	4690	276000	28100	*	0.341	46000	4690	276000	28100	*	8 - 6265DA - 5133	B-115	B-132	B-151
0.235	44000	4490	276000	28100	*	0.283	44000	4490	276000	28100	*	8 - 6265DA - 6177	B-115	B-132	B-151
0.192	44000	4490	276000	28100	*	0.231	44000	4490	276000	28100	*	8 - 6265DA - 7569	B-115	B-132	B-151

6. "☆" indicates models manufactured with reducer and motor separately mounted on a common baseplate (horizontal shaft direction) or on an adaptor (vertical shaft direction). Consult us for details, including dimensions.
7. Allowable radial load (Pro) is the value at the midpoint of the slow speed shaft.
8. "(K)" indicates models with reduction ratios equal to nominal ratio. Refer to Table A-3 "6000SK Series (Actual Reduction Ratio)" on page A-4 for actual reduction ratio. Indicated reduction ratio is the same as actual reduction ratio for other models.
9. Maintain torque load during operation within "Output torque" in the table for models with "*" in the SF column. They cannot be operated with 100% motor rating.

Selection Tables Gearmotors

n_1: Motor Speed

7.5 kW	Hz	50Hz		60Hz	
	P	4	6	4	6
	n_1 r/min	1450	980	1750	1165

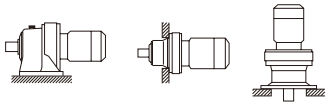

CHHM/CNHM CHFM/CNFM CVVM/CNVM

50Hz						60Hz						Nomenclature				Page of Dimension Sheet		
Output Speed n_2 [r/min]	Output Torque Tout [N·m]	[kgf·m]	Allowable Radial Load Pro [N]	[kgf]	SF	Output Speed n_2 [r/min]	Output Torque Tout [N·m]	[kgf·m]	Allowable Radial Load Pro [N]	[kgf]	SF	Input Capacity Symbol	– Frame Size	– Reduction Ratio		CNHM CHHM	CNFM CHFM	CNVM CVVM
			5980	**610**	**1.25**				**5650**	**576**	**1.25**	**10 -**	**6130**	**- 6**		**B-102**	**B-118**	**B-137**
			5980	610	1.51				5650	576	1.51	10 -	6135	- 6		B-102	B-118	B-137
242	282	28.7	9330	951	1.73	292	233	23.8	8830	901	1.73	10 -	6140	- 6		B-102	B-118	B-137
			9330	951	2.01				8830	901	2.01	10 -	6145	- 6		B-102	B-118	B-137
			10400	1070	2.71				9830	1000	2.71	10 -	6160	- 6		B-103	B-119	B-138
			6650	**678**	**1.25**				**6290**	**641**	**1.25**	**10 -**	**6130**	**- 8**		**B-102**	**B-118**	**B-137**
			6650	678	1.51				6290	641	1.51	10 -	6135	- 8		B-102	B-118	B-137
181	375	38.3	10300	1050	1.73	219	311	31.7	9790	998	1.73	10 -	6140	- 8		B-102	B-118	B-137
			10300	1050	2.01				9790	998	2.01	10 -	6145	- 8		B-102	B-118	B-137
			11700	1190	2.63				11000	1120	2.63	10 -	6160	- 8		B-103	B-119	B-138
			7570	**771**	**1.25**				**7150**	**729**	**1.25**	**10 -**	**6130**	**- 11**		**B-102**	**B-118**	**B-137**
			7570	771	1.51				7150	729	1.51	10 -	6135	- 11		B-102	B-118	B-137
132	516	52.6	11600	1180	1.73	159	428	43.6	11000	1120	1.73	10 -	6140	- 11		B-102	B-118	B-137
			11600	1180	2.01				11000	1120	2.01	10 -	6145	- 11		B-102	B-118	B-137
			13200	1350	2.63				12500	1270	2.63	10 -	6160	- 11		B-103	B-119	B-138
			7860	**801**	**1.25**				**7430**	**758**	**1.25**	**10 -**	**6130**	**- 13**		**B-102**	**B-118**	**B-137**
			7860	801	1.36				7430	758	1.51	10 -	6135	- 13		B-102	B-118	B-137
112	610	62.2	11800	1210	1.73	135	505	51.5	11200	1140	1.73	10 -	6140	- 13		B-102	B-118	B-137
			11800	1210	2.01				11200	1140	2.01	10 -	6145	- 13		B-102	B-118	B-137
			13800	1410	2.63				13000	1330	2.63	10 -	6160	- 13		B-103	B-119	B-138
			8000	**815**	**1.04**				**7570**	**771**	**1.04**	**10 -**	**6130**	**- 15**		**B-102**	**B-118**	**B-137**
			8000	815	1.20				7570	771	1.20	10 -	6135	- 15		B-102	B-118	B-137
			12400	1260	1.60				11700	1200	1.60	10 -	6140	- 15		B-102	B-118	B-137
96.7	704	71.8	12400	1260	1.93	117	583	59.5	11700	1200	2.01	10 -	6145	- 15		B-102	B-118	B-137
			14700	1490	2.49				13800	1410	2.49	10 -	6160	- 15		B-103	B-119	B-138
			14700	1490	2.99				13800	1410	3.01	10 -	6165	- 15		B-103	B-119	B-138
			8550	**872**	**1.11**				**8100**	**826**	**1.11**	**10 -**	**6135**	**- 17**		**B-102**	**B-118**	**B-137**
			12900	1320	1.35				12200	1250	1.35	10 -	6140	- 17		B-102	B-118	B-137
			12900	1320	1.60				12200	1250	1.60	10 -	6145	- 17		B-102	B-118	B-137
85.3	798	81.3	15100	1540	1.75	103	661	67.4	14300	1450	1.75	10 -	6160	- 17		B-103	B-119	B-138
			15100	1540	2.51				14300	1450	2.51	10 -	6165	- 17		B-103	B-119	B-138
			17100	1740	2.63				16100	1640	2.63	10 -	6170	- 17		B-103	B-119	B-138
			9050	923	0.90				8590	876	1.00	10 -	6135	- 21		B-102	B-118	B-137
			13800	**1410**	**1.15**				**13100**	**1330**	**1.15**	**10 -**	**6140**	**- 21**		**B-102**	**B-118**	**B-137**
			13800	1410	1.27				13100	1330	1.47	10 -	6145	- 21		B-102	B-118	B-137
69.0	985	100	16200	1650	1.72	83.3	817	83.2	15300	1560	1.72	10 -	6160	- 21		B-103	B-119	B-138
			16200	1650	2.13				15300	1560	2.15	10 -	6165	- 21		B-103	B-119	B-138
			18400	1880	2.48				17400	1770	2.60	10 -	6170	- 21		B-103	B-119	B-138
			14400	**1470**	**1.05**				**13700**	**1390**	**1.05**	**10 -**	**6145**	**- 25**		**B-102**	**B-118**	**B-137**
			16900	1720	1.31				15900	1630	1.31	10 -	6160	- 25		B-103	B-119	B-138
58.0	1170	120	16900	1720	1.79	70.0	972	99.1	15900	1630	2.01	10 -	6165	- 25		B-103	B-119	B-138
			19100	1940	2.08				18000	1830	2.11	10 -	6170	- 25		B-103	B-119	B-138
			19100	1940	2.60				18000	1830	2.60	10 -	6175	- 25		B-103	B-119	B-138
			14700	**1500**	**1.00**				**14000**	**1420**	**1.00**	**10 -**	**6145**	**- 29**		**B-102**	**B-118**	**B-137**
			17600	1790	1.27				16600	1690	1.40	10 -	6160	- 29		B-103	B-119	B-138
			17600	1790	1.52				16600	1690	1.52	10 -	6165	- 29		B-103	B-119	B-138
50.0	1360	139	20100	2050	1.80	60.3	1130	115	18900	1930	1.91	10 -	6170	- 29		B-103	B-119	B-138
			20100	2050	2.32				18900	1930	2.51	10 -	6175	- 29		B-103	B-119	B-138
			26800	2740	2.60				25300	2580	2.60	10 -	6180	- 29		B-104	B-120	B-139
			14500	1480	0.83				14900	1520	1.00	10 -	6145	- 35		B-102	B-118	B-137
			18600	**1890**	**1.07**				**17500**	**1790**	**1.29**	**10 -**	**6160**	**- 35**		**B-103**	**B-119**	**B-138**
			18600	1890	1.28				17500	1790	1.52	10 -	6165	- 35		B-103	B-119	B-138
41.4	1640	167	21200	2160	1.49	50.0	1360	139	20000	2040	1.60	10 -	6170	- 35		B-103	B-119	B-138
			21200	2160	1.92				20000	2040	2.01	10 -	6175	- 35		B-103	B-119	B-138
			28600	2920	2.47				26900	2750	2.51	10 -	6180	- 35		B-104	B-120	B-139

1. Combinations in **bold** are the recommended models for operations for 10 hours/day with uniform load (service factor is about 1.0 for motor rating at 50Hz).
2. Motor slippage may affect n_1 and n_2. Refer to technical data for details.
3. CNHM, CHHM, CNFM, CHFM, CNVM, and CVVM indicate types. Refer to page B-10 for details.
4. Lubrication method is different for each model. Refer to "Lubrication" section in page F-4~F-5 for details.
5. "6" at the end of "input capacity symbol" indicates models with 6P motor. Other models come with 4P motor.

Selection Tables Gearmotors

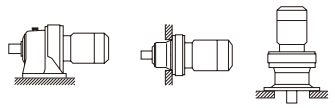

7.5 kW

n_1: Motor Speed

Hz	50Hz		60Hz	
P	4	6	4	6
n_1 r/min	1450	980	1750	1165

50Hz						60Hz						Nomenclature				Page of Dimension Sheet		
Output Speed n_2 [r/min]	Output Torque Tout [N·m]	[kgf·m]	Allowable Radial Load Pro [N]	[kgf]	SF	Output Speed n_2 [r/min]	Output Torque Tout [N·m]	[kgf·m]	Allowable Radial Load Pro [N]	[kgf]	SF	Input Capacity Symbol	- Frame Size	- Reduction Ratio		CNHM CHHM	CNFM CHFM	CNVM CVVM
			19700	**2010**	**1.04**				**18600**	**1900**	**1.05**	**10 -**	**6165**	**- 43**		**B-103**	**B-119**	**B-138**
			22500	2300	1.21				21300	2170	1.30	10 -	6170	- 43		B-103	B-119	B-138
33.7	2020	206	22500	2300	1.51	40.7	1670	170	21300	2170	1.51	10 -	6175	- 43		B-103	B-119	B-138
			30700	3130	2.01				28900	2950	2.01	10 -	6180	- 43		B-104	B-120	B-139
			30700	3130	2.48				28900	2950	2.51	10 -	6185	- 43		B-104	B-120	B-139
			42800	4370	2.79				40300	4110	2.79	10 -	6190	- 43		B-104	B-120	B-139
			20400	2080	0.88				19300	1970	1.00	10 -	6165	- 51		B-103	B-119	B-138
			23400	**2390**	**1.02**				**22100**	**2250**	**1.12**	**10 -**	**6170**	**- 51**		**B-103**	**B-119**	**B-138**
			23400	2390	1.32				22100	2250	1.51	10 -	6175	- 51		B-103	B-119	B-138
28.4	2390	244	31700	3230	1.60	34.3	1980	202	29900	3050	1.60	10 -	6180	- 51		B-104	B-120	B-139
			31700	3230	2.01				29900	3050	2.01	10 -	6185	- 51		B-104	B-120	B-139
			44800	4560	2.43				42100	4290	2.43	10 -	6190	- 51		B-104	B-120	B-139
			44800	4560	2.79				42100	4290	2.79	10 -	6195	- 51		B-104	B-120	B-139
			24400	**2490**	**1.11**				**23100**	**2360**	**1.11**	**10 -**	**6175**	**- 59**		**B-103**	**B-119**	**B-138**
			33100	3380	1.30				31200	3180	1.30	10 -	6180	- 59		B-104	B-120	B-139
24.6	2770	282	33100	3380	1.60	29.7	2290	234	31200	3180	1.60	10 -	6185	- 59		B-104	B-120	B-139
			46800	4770	2.04				44000	4490	2.04	10 -	6190	- 59		B-104	B-120	B-139
			46800	4770	2.51				44000	4490	2.51	10 -	6195	- 59		B-104	B-120	B-139
			25700	2620	0.93				24300	2480	0.95	10 -	6175	- 71		B-103	B-119	B-138
			35100	**3580**	**1.17**				**33100**	**3380**	**1.17**	**10 -**	**6180**	**- 71**		**B-104**	**B-120**	**B-139**
20.4	3330	340	35100	3580	1.31	24.6	2760	281	33100	3380	1.31	10 -	6185	- 71		B-104	B-120	B-139
			49600	5050	1.80				46700	4760	1.80	10 -	6190	- 71		B-104	B-120	B-139
			49600	5050	2.08				46700	4760	2.08	10 -	6195	- 71		B-104	B-120	B-139
			37700	**3840**	**1.15**				**35600**	**3620**	**1.15**	**10 -**	**6185**	**- 87**		**B-104**	**B-120**	**B-139**
16.7	4080	416	53300	5430	1.56	20.1	3380	345	50200	5120	1.57	10 -	6190	- 87		B-104	B-120	B-139
			53300	5430	1.81				50200	5120	1.81	10 -	6195	- 87		B-104	B-120	B-139
			40000	**4080**	**1.06**				**37800**	**3850**	**1.28**	**10 -**	**6185DB**	**- 104**		**B-111**	**B-127**	**B-146**
13.9	4620	471	56400	5750	1.38	16.8	3830	391	53200	5420	1.51	10 -	6190DB	- 104		B-112	B-128	B-147
			56400	5750	1.51				53200	5420	1.51	10 -	6195DB	- 104		B-112	B-128	B-147
	4060	414	41700	4250	*		4060	414	40300	4100	*	10 -	6180DB	- 121		B-111	B-127	B-146
			41700	4250	0.89				40100	4090	1.08	10 -	6185DB	- 121		B-111	B-127	B-146
			59000	6010	1.19				56600	5770	1.43	10 -	6190DB	- 121		B-112	B-128	B-147
12.0	5380	548	59000	6010	1.41	14.5	4460	454	56600	5770	1.51	10 -	6195DB	- 121		B-112	B-128	B-147
			84100	8570	1.51				84100	8570	1.51	10 -	6205DB	- 121		B-112	B-129	B-148
			104000	10600	2.12				102000	10400	2.55	10 -	6215DB	- 121		B-113	B-130	B-149
			115000	11700	2.50				109000	11100	3.02	10 -	6225DB	- 121		B-113	B-130	B-149
	4060	414	41700	4250	*		4060	414	41700	4250	*	10 -	6180DB	- 143		B-111	B-127	B-146
10.1	4900	500	41700	4250	*	12.2	4900	500	41700	4250	*	10 -	6185DB	- 143		B-111	B-127	B-146
	6360	648	**58700**	**5980**	**1.00**		5270	537	**58800**	**5990**	**1.21**	**10 -**	**6190DB**	**- 143**		**B-112**	**B-128**	**B-147**
			58700	5980	1.20				58800	5990	1.45	10 -	6195DB	- 143		B-112	B-128	B-147
	4920	502	41700	4250	*		4920	502	41700	4250	*	10 -	6185DB	- 165		B-111	B-127	B-146
			58500	**5960**	**1.08**				**59000**	**6010**	**1.30**	**10 -**	**6195DB**	**- 165**		**B-112**	**B-128**	**B-147**
			84100	8570	1.26				84100	8570	1.51	10 -	6205DB	- 165		B-112	B-129	B-148
8.79	7340	748	104000	10600	1.51	10.6	6080	620	104000	10600	1.51	10 -	6215DA	- 165		B-112	B-129	B-148
			104000	10600	1.66				104000	10600	2.00	10 -	6215DB	- 165		B-113	B-130	B-149
			124000	12600	1.97				117000	12000	2.38	10 -	6225DB	- 165		B-113	B-130	B-149
			154000	15700	2.67				146000	14800	3.21	10 -	6235DA	- 165		B-114	B-131	B-150

6. "☆" indicates models manufactured with reducer and motor separately mounted on a common baseplate (horizontal shaft direction) or on an adaptor (vertical shaft direction). Consult us for details, including dimensions.
7. Allowable radial load (Pro) is the value at the midpoint of the slow speed shaft.
8. "(K)" indicates models with reduction ratios equal to nominal ratio. Refer to Table A-3 "6000SK Series (Actual Reduction Ratio)" on page A-4 for actual reduction ratio. Indicated reduction ratio is the same as actual reduction ratio for other models.
9. Maintain torque load during operation within "Output torque" in the table for models with "*" in the SF column. They cannot be operated with 100% motor rating.

Selection Tables Gearmotors

n_1: Motor Speed

7.5 kW	Hz	50Hz		60Hz	
	P	4	6	4	6
	n_1 r/min	1450	980	1750	1165

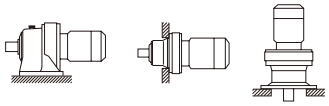

CHHM/CNHM CHFM/CNFM CVVM/CNVM

50Hz						60Hz						Nomenclature	Page of Dimension Sheet		
Output Speed n_2 [r/min]	Output Torque Tout [N·m]	[kgf·m]	Allowable Radial Load Pro [N]	[kgf]	SF	Output Speed n_2 [r/min]	Output Torque Tout [N·m]	[kgf·m]	Allowable Radial Load Pro [N]	[kgf]	SF	Input Capacity Symbol - Frame Size - Reduction Ratio	CNHM CHHM	CNFM CHFM	CNVM CVVM
7.44	6380	650	58900	6000	*	8.97	6380	650	58900	6000	*	10 - 6190DB - 195	B-112	B-128	B-147
	8670	884	58000	5910	0.91	7180	732		58600	5970	1.10	10 - 6195DB - 195	B-112	B-128	B-147
			84100	**8570**	**1.07**				**84100**	**8570**	**1.29**	**10 - 6205DB - 195**	**B-112**	**B-129**	**B-148**
			104000	10600	1.36				104000	10600	1.51	10 - 6215DA - 195	B-112	B-129	B-148
			104000	10600	1.40				104000	10600	1.69	10 - 6215DB - 195	B-113	B-130	B-149
			130000	13300	1.36				123000	12600	1.51	10 - 6225DA - 195	B-113	B-130	B-149
			130000	13300	1.67				123000	12600	2.02	10 - 6225DB - 195	B-113	B-130	B-149
			162000	16500	2.26				153000	15600	2.73	10 - 6235DA - 195	B-114	B-131	B-150
6.28	6380	650	59000	6010	*	7.58	6380	650	59000	6010	*	10 - 6190DB - 231	B-112	B-128	B-147
	7960	811	59000	6010	*		7960	811	59000	6010	*	10 - 6195DB - 231	B-112	B-128	B-147
	10300	1050	84100	8570	0.90		8510	867	84100	8570	1.09	10 - 6205DB - 231	B-112	B-129	B-148
			104000	10600	1.22				104000	10600	1.47	10 - 6215DA - 231	B-112	B-129	B-148
			138000	14100	1.44				131000	13400	1.51	10 - 6225DA - 231	B-113	B-130	B-149
			138000	14100	1.44				131000	13400	1.74	10 - 6225DB - 231	B-113	B-130	B-149
			173000	17600	1.84				164000	16700	2.22	10 - 6235DA - 231	B-114	B-131	B-150
			192000	19600	2.51				182000	18600	3.03	10 - 6245DA - 231	B-114	B-131	B-150
5.31	7960	811	59000	6010	*	6.41	7960	811	59000	6010	*	10 - 6195DB - 273	B-112	B-128	B-147
	9270	945	84100	8570	*		9270	945	84100	8570	*	10 - 6205DB - 273	B-112	B-129	B-148
	12100	1240	**104000**	**10600**	**1.03**		10100	1030	**104000**	**10600**	**1.24**	**10 - 6215DA - 273**	**B-112**	**B-129**	**B-148**
			145000	14800	1.22				138000	14000	1.47	10 - 6225DA - 273	B-113	B-130	B-149
			179000	18200	1.56				172000	17500	1.88	10 - 6235DA - 273	B-114	B-131	B-150
			202000	20600	2.13				191000	19500	2.57	10 - 6245DA - 273	B-114	B-131	B-150
			246000	25100	2.55				233000	23700	3.08	10 - 6255DA - 273	B-115	B-132	B-151
4.55	14200	1450	104000	10600	0.89	5.49	11800	1200	104000	10600	1.08	10 - 6215DA - 319	B-112	B-129	B-148
			145000	**14800**	**1.06**				**143000**	**14600**	**1.28**	**10 - 6225DA - 319**	**B-113**	**B-130**	**B-149**
			179000	18200	1.33				179000	18200	1.61	10 - 6235DA - 319	B-114	B-131	B-150
			208000	21200	1.82				199000	20300	2.20	10 - 6245DA - 319	B-114	B-131	B-150
			258000	26300	2.29				245000	25000	2.76	10 - 6255DA - 319	B-115	B-132	B-151
3.85	12700	1290	104000	10600	*	4.64	12700	1290	104000	10600	*	10 - 6215DA - 377	B-112	B-129	B-148
	16800	1710	145000	14800	0.90		13900	1420	145000	14800	1.08	10 - 6225DA - 377	B-113	B-130	B-149
			179000	18200	1.13				179000	18200	1.36	10 - 6235DA - 377	B-114	B-131	B-150
			208000	21200	1.54				208000	21200	1.86	10 - 6245DA - 377	B-114	B-131	B-150
			258000	26300	1.94				257000	26200	2.34	10 - 6255DA - 377	B-115	B-132	B-151
			276000	28100	2.74				276000	28100	3.31	10 - 6265DA - 377	B-115	B-132	B-151
3.07	16000	1630	145000	14800	*	3.70	16000	1630	145000	14800	*	10 - 6225DA - 473	B-113	B-130	B-149
	21000	2140	179000	18200	0.97		17400	1780	179000	18200	1.18	10 - 6235DA - 473	B-114	B-131	B-150
			208000	21200	1.23				208000	21200	1.48	10 - 6245DA - 473	B-114	B-131	B-150
			258000	26300	1.64				258000	26300	1.98	10 - 6255DA - 473	B-115	B-132	B-151
			276000	28100	2.19				276000	28100	2.64	10 - 6265DA - 473	B-115	B-132	B-151
2.59	16000	1630	145000	14800	*	3.13	16000	1630	145000	14800	*	10 - 6225DA - 559	B-113	B-130	B-149
	20500	2090	179000	18200	*		20500	2090	179000	18200	*	10 - 6235DA - 559	B-114	B-131	B-150
	24900	2530	179000	18200	0.82		20600	2100	179000	18200	1.00	10 - 6235DA - 559	B-114	B-131	B-150
			208000	**21200**	**1.04**				**208000**	**21200**	**1.25**	**10 - 6245DA - 559**	**B-114**	**B-131**	**B-150**
			258000	26300	1.39				258000	26300	1.68	10 - 6255DA - 559	B-115	B-132	B-151
			276000	28100	1.85				276000	28100	2.23	10 - 6265DA - 559	B-115	B-132	B-151
			248000	25300	2.74				248000	25300	3.31	10 - 6275DA - 559	B-115	-	B-151
2.23	20500	2090	179000	18200	*	2.70	20500	2090	179000	18200	*	10 - 6235DA - 649	B-114	B-131	B-150
	28900	2940	208000	21200	0.89		23900	2440	208000	21200	1.08	10 - 6245DA - 649	B-114	B-131	B-150
			258000	26300	1.20				258000	26300	1.44	10 - 6255DA - 649	B-115	B-132	B-151
			276000	28100	1.59				276000	28100	1.92	10 - 6265DA - 649	B-115	B-132	B-151
			248000	25300	2.36				248000	25300	2.85	10 - 6275DA - 649	B-115	-	B-151
1.98	20500	2090	179000	18200	*	2.39	20500	2090	179000	18200	*	10 - 6235DA - 731	B-114	B-131	B-150
	25800	2630	208000	21200	*		25800	2630	208000	21200	*	10 - 6245DA - 731	B-114	B-131	B-150
	32500	3310	**258000**	**26300**	**1.06**		26900	2740	**258000**	**26300**	**1.28**	**10 - 6255DA - 731**	**B-115**	**B-132**	**B-151**
			276000	28100	1.42				276000	28100	1.71	10 - 6265DA - 731	B-115	B-132	B-151
			248000	25300	2.10				248000	25300	2.53	10 - 6275DA - 731	B-115	-	B-151

1. Combinations in **bold** are the recommended models for operations for 10 hours/day with uniform load (service factor is about 1.0 for motor rating at 50Hz).
2. Motor slippage may affect n_1 and n_2. Refer to technical data for details.
3. CNHM, CHHM, CNFM, CHFM, CNVM, and CVVM indicate types. Refer to page B-10 for details.
4. Lubrication method is different for each model. Refer to "Lubrication" section in page F-4~F-5 for details.
5. "6" at the end of "input capacity symbol" indicates models with 6P motor. Other models come with 4P motor.

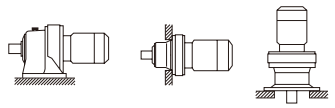

n_1: Motor Speed

7.5 kW	Hz	50Hz		60Hz	
	P	4	6	4	6
	n_1 r/min	1450	980	1750	1165

50Hz						60Hz						Nomenclature				Page of Dimension Sheet		
Output Speed n_2 [r/min]	Output Torque Tout [N·m]	[kgf·m]	Allowable Radial Load Pro [N]	[kgf]	SF	Output Speed n_2 [r/min]	Output Torque Tout [N·m]	[kgf·m]	Allowable Radial Load Pro [N]	[kgf]	SF	Input Capacity Symbol	–	Frame Size	– Reduction Ratio	CNHM CHHM	CNFM CHFM	CNVM CVVM
1.72	25800	2630	208000	21200	*	2.08	25800	2630	208000	21200	*	10	-	6245DA	- 841	B-114	B-131	B-150
	37400	3810	258000	26300	0.87		31000	3160	258000	26300	1.05	10	-	6255DA	- 841	B-115	B-132	B-151
			276000	28100	1.23				276000	28100	1.48	10	-	6265DA	- 841	B-115	B-132	B-151
			248000	25300	1.82				248000	25300	2.20	10	-	6275DA	- 841	B-115	-	B-151
1.45	34500	3520	258000	26300	*	1.74	34500	3520	258000	26300	*	10	-	6255DA	- 1003	B-115	B-132	B-151
	44600	4550	**276000**	**28100**	**1.03**		36900	3770	**276000**	**28100**	**1.25**	**10**	**-**	**6265DA**	**- 1003**	**B-115**	**B-132**	**B-151**
			248000	25300	1.53				248000	25300	1.85	10	-	6275DA	- 1003	B-115	-	B-151
1.16	34500	3520	258000	26300	*	1.40	34500	3520	258000	26300	*	10	-	6255DA	- 1247	B-115	B-132	B-151
	46000	4690	276000	28100	*		46000	4690	276000	28100	*	10	-	6265DA	- 1247	B-115	B-132	B-151
	55400	5650	276000	28100	0.83		45900	4680	276000	28100	1.00	10	-	6265DA	- 1247	B-115	B-132	B-151
			248000	25300	1.23				248000	25300	1.48	10	-	6275DA	- 1247	B-115	-	B-151
0.980	44000	4490	276000	28100	*	1.18	44000	4490	276000	28100	*	10	-	6265DA	- 1479	B-115	B-132	B-151
	65800	6700	**247000**	**25200**	**1.04**		**54500**	**5550**	**248000**	**25300**	**1.25**	**10**	**-**	**6275DA**	**- 1479**	**B-115**	**-**	**B-151**
0.784	82200	8380	248000	25300	0.83	0.946	68100	6940	248000	25300	1.00	10	-	6275DA	- 1849	B-115	-	B-151
0.702	68200	6950	248000	25300	*	0.847	68200	6950	248000	25300	*	10	-	6275DA	- 2065	B-115	-	B-151
0.572	68200	6950	248000	25300	*	0.690	68200	6950	248000	25300	*	10	-	6275DA	- 2537	B-115	-	B-151
0.476	68200	6950	245000	25000	*	0.575	68200	6950	245000	25000	*	10	-	6275DA	- 3045	B-115	-	B-151
0.417	68200	6950	248000	25300	*	0.503	68200	6950	248000	25300	*	10	-	6275DA	- 3481	B-115	-	B-151
0.327	68200	6950	245000	25000	*	0.394	68200	6950	245000	25000	*	10	-	6275DA	- 4437	B-115	-	B-151
0.282	68200	6950	245000	25000	*	0.341	68200	6950	245000	25000	*	10	-	6275DA	- 5133	B-115	-	B-151
0.235	68200	6950	245000	25000	*	0.283	68200	6950	245000	25000	*	10	-	6275DA	- 6177	B-115	-	B-151
0.192	68200	6950	245000	25000	*	0.231	68200	6950	245000	25000	*	10	-	6275DA	- 7569	B-115	-	B-151

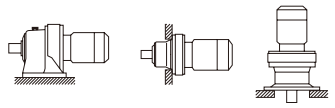

n_1: Motor Speed

11 kW	Hz	50Hz		60Hz	
	P	4	6	4	6
	n_1 r/min	1450	980	1750	1165

50Hz						60Hz						Nomenclature				Page of Dimension Sheet		
Output Speed n_2 [r/min]	Output Torque Tout [N·m]	[kgf·m]	Allowable Radial Load Pro [N]	[kgf]	SF	Output Speed n_2 [r/min]	Output Torque Tout [N·m]	[kgf·m]	Allowable Radial Load Pro [N]	[kgf]	SF	Input Capacity Symbol	–	Frame Size	– Reduction Ratio	CNHM CHHM	CNFM CHFM	CNVM CVVM
242	413	42.1	**5840**	**595**	**1.03**	292	342	34.9	**5540**	**564**	**1.03**	**15**	**-**	**6135**	**- 6**	**B-102**	**B-118**	**B-137**
			9270	945	1.18				8780	895	1.18	15	-	6140	- 6	B-102	B-118	B-137
			9270	945	1.37				8780	895	1.37	15	-	6145	- 6	B-102	B-118	B-137
			10400	1060	1.85				9760	995	1.85	15	-	6160	- 6	B-103	B-119	B-138
			10400	1060	2.19				9760	995	2.19	15	-	6165	- 6	B-103	B-119	B-138
			11700	1190	2.51				11000	1120	2.51	15	-	6170	- 6	B-103	B-119	B-138
			11700	1190	2.74				11000	1120	2.74	15	-	6175	- 6	B-103	B-119	B-138
181	551	56.1	**6480**	**661**	**1.03**	219	456	46.5	**6150**	**627**	**1.03**	**15**	**-**	**6135**	**- 8**	**B-102**	**B-118**	**B-137**
			10300	1050	1.18				9730	992	1.18	15	-	6140	- 8	B-102	B-118	B-137
			10300	1050	1.37				9730	992	1.37	15	-	6145	- 8	B-102	B-118	B-137
			11600	1180	1.79				10900	1110	1.79	15	-	6160	- 8	B-103	B-119	B-138
			11600	1180	2.19				10900	1110	2.19	15	-	6165	- 8	B-103	B-119	B-138
			12900	1320	2.51				12200	1240	2.51	15	-	6170	- 8	B-103	B-119	B-138
			12900	1320	2.74				12200	1240	2.74	15	-	6175	- 8	B-103	B-119	B-138

6. "☆" indicates models manufactured with reducer and motor separately mounted on a common baseplate (horizontal shaft direction) or on an adaptor (vertical shaft direction). Consult us for details, including dimensions.
7. Allowable radial load (Pro) is the value at the midpoint of the slow speed shaft.
8. "(K)" indicates models with reduction ratios equal to nominal ratio. Refer to Table A-3 "6000SK Series (Actual Reduction Ratio)" on page A-4 for actual reduction ratio. Indicated reduction ratio is the same as actual reduction ratio for other models.
9. Maintain torque load during operation within "Output torque" in the table for models with "*" in the SF column. They cannot be operated with 100% motor rating.

Selection Tables Gearmotors

n_1: Motor Speed

11 kW	Hz	50Hz		60Hz	
	P	4	6	4	6
	n_1 r/min	1450	980	1750	1165

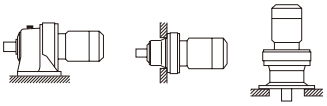

50Hz						60Hz						Nomenclature				Page of Dimension Sheet		
Output Speed n_2 [r/min]	Output Torque Tout [N·m]	[kgf·m]	Allowable Radial Load Pro [N]	[kgf]	SF	Output Speed n_2 [r/min]	Output Torque Tout [N·m]	[kgf·m]	Allowable Radial Load Pro [N]	[kgf]	SF	Input Capacity Symbol	– Frame Size	– Reduction Ratio		CNHM CHHM	CNFM CHFM	CNVM CVVM
			7360	**750**	**1.03**				**6980**	**712**	**1.03**	**15 -**	**6135**	**- 11**		**B-102**	**B-118**	**B-137**
			11500	1170	1.18				10900	1110	1.18	15 -	6140	- 11		B-102	B-118	B-137
			11500	1170	1.37				10900	1110	1.37	15 -	6145	- 11		B-102	B-118	B-137
132	757	77.2	13100	1330	1.79	159	627	63.9	12300	1260	1.79	15 -	6160	- 11		B-103	B-119	B-138
			13100	1330	2.19				12300	1260	2.19	15 -	6165	- 11		B-103	B-119	B-138
			14900	1520	2.51				14000	1430	2.51	15 -	6170	- 11		B-103	B-119	B-138
			14900	1520	2.74				14000	1430	2.74	15 -	6175	- 11		B-103	B-119	B-138
			11700	**1200**	**1.18**				**11100**	**1140**	**1.18**	**15 -**	**6140**	**- 13**		**B-102**	**B-118**	**B-137**
			11700	1200	1.37				11100	1140	1.37	15 -	6145	- 13		B-102	B-118	B-137
			13700	1390	1.79				12900	1320	1.79	15 -	6160	- 13		B-103	B-119	B-138
112	895	91.2	13700	1390	2.05	135	741	75.6	12900	1320	2.05	15 -	6165	- 13		B-103	B-119	B-138
			15500	1580	2.48				14600	1490	2.48	15 -	6170	- 13		B-103	B-119	B-138
			15500	1580	2.74				14600	1490	2.74	15 -	6175	- 13		B-103	B-119	B-138
			12300	**1250**	**1.09**				**11600**	**1190**	**1.09**	**15 -**	**6140**	**- 15**		**B-102**	**B-118**	**B-137**
			12300	1250	1.32				11600	1190	1.37	15 -	6145	- 15		B-102	B-118	B-137
			14500	1470	1.70				13600	1390	1.70	15 -	6160	- 15		B-103	B-119	B-138
96.7	1030	105	14500	1470	2.04	117	855	87.2	13600	1390	2.05	15 -	6165	- 15		B-103	B-119	B-138
			16300	1660	2.32				15400	1570	2.32	15 -	6170	- 15		B-103	B-119	B-138
			16300	1660	2.74				15400	1570	2.74	15 -	6175	- 15		B-103	B-119	B-138
			21700	2210	2.95				20400	2080	2.95	15 -	6180	- 15		B-104	B-120	B-139
			12800	**1300**	**1.09**				**12100**	**1240**	**1.09**	**15 -**	**6145**	**- 17**		**B-102**	**B-118**	**B-137**
			14900	1520	1.19				14100	1430	1.19	15 -	6160	- 17		B-103	B-119	B-138
			14900	1520	1.71				14100	1430	1.71	15 -	6165	- 17		B-103	B-119	B-138
85.3	1170	119	16900	1720	1.79	103	969	98.8	16000	1630	1.79	15 -	6170	- 17		B-103	B-119	B-138
			16900	1720	2.19				16000	1630	2.19	15 -	6175	- 17		B-103	B-119	B-138
			22900	2340	2.78				21600	2200	2.78	15 -	6180	- 17		B-104	B-120	B-139
			13600	1390	0.86				12900	1320	1.00	15 -	6145	- 21		B-102	B-118	B-137
			15900	**1620**	**1.17**				**15000**	**1530**	**1.17**	**15 -**	**6160**	**- 21**		**B-103**	**B-119**	**B-138**
			15900	1620	1.45				15000	1530	1.46	15 -	6165	- 21		B-103	B-119	B-138
69.0	1450	147	18200	1860	1.69	83.3	1200	122	17200	1750	1.77	15 -	6170	- 21		B-103	B-119	B-138
			18200	1860	2.15				17200	1750	2.19	15 -	6175	- 21		B-103	B-119	B-138
			24500	2500	2.73				23100	2350	2.73	15 -	6180	- 21		B-104	B-120	B-139
			16600	1690	1.22				15700	1600	1.37	15 -	6165	- 25		B-103	B-119	B-138
			18800	1920	1.42				17800	1810	1.44	15 -	6170	- 25		B-103	B-119	B-138
58.0	1720	175	18800	1920	1.77	70.0	1430	145	17800	1810	1.77	15 -	6175	- 25		B-103	B-119	B-138
			25500	2600	2.19				24000	2450	2.19	15 -	6180	- 25		B-104	B-120	B-139
			25500	2600	2.74				24000	2450	2.74	15 -	6185	- 25		B-104	B-120	B-139
			17200	**1750**	**1.04**				**16300**	**1660**	**1.04**	**15 -**	**6165**	**- 29**		**B-103**	**B-119**	**B-138**
			19800	2010	1.23				18700	1900	1.30	15 -	6170	- 29		B-103	B-119	B-138
			19800	2010	1.58				18700	1900	1.71	15 -	6175	- 29		B-103	B-119	B-138
50.0	2000	203	26600	2710	1.77	60.3	1650	169	25100	2560	1.77	15 -	6180	- 29		B-104	B-120	B-139
			26600	2710	2.19				25100	2560	2.19	15 -	6185	- 29		B-104	B-120	B-139
			37500	3830	2.79				35300	3600	2.79	15 -	6190	- 29		B-104	B-120	B-139
			18100	1840	0.87				17100	1750	1.04	15 -	6165	- 35		B-103	B-119	B-138
			20900	**2130**	**1.02**				**19700**	**2010**	**1.09**	**15 -**	**6170**	**- 35**		**B-103**	**B-119**	**B-138**
			20900	2130	1.31				19700	2010	1.37	15 -	6175	- 35		B-103	B-119	B-138
41.4	2410	246	28400	2890	1.68	50.0	2000	203	26700	2730	1.71	15 -	6180	- 35		B-104	B-120	B-139
			28400	2890	2.05				26700	2730	2.05	15 -	6185	- 35		B-104	B-120	B-139
			39600	4040	2.21				37300	3800	2.21	15 -	6190	- 35		B-104	B-120	B-139
			39600	4040	2.74				37300	3800	2.74	15 -	6195	- 35		B-104	B-120	B-139
			22100	**2250**	**1.03**				**20900**	**2130**	**1.03**	**15 -**	**6175**	**- 43**		**B-103**	**B-119**	**B-138**
			30300	3090	1.37				28600	2920	1.37	15 -	6180	- 43		B-104	B-120	B-139
			30300	3090	1.69				28600	2920	1.71	15 -	6185	- 43		B-104	B-120	B-139
33.7	2960	302	42600	4340	1.90	40.7	2450	250	40100	4090	1.90	15 -	6190	- 43		B-104	B-120	B-139
			42600	4340	2.46				40100	4090	2.74	15 -	6195	- 43		B-104	B-120	B-139
			77700	7920	2.89				73500	7500	2.89	15 -	6205	- 43		B-105	B-121	B-140

1. Combinations in **bold** are the recommended models for operations for 10 hours/day with uniform load (service factor is about 1.0 for motor rating at 50Hz).
2. Motor slippage may affect n_1 and n_2. Refer to technical data for details.
3. CNHM, CHHM, CNFM, CHFM, CNVM, and CVVM indicate types. Refer to page B-10 for details.
4. Lubrication method is different for each model. Refer to "Lubrication" section in page F-4~F-5 for details.
5. "6" at the end of "input capacity symbol" indicates models with 6P motor. Other models come with 4P motor.

Selection Tables Gearmotors

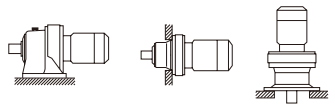

n_1: Motor Speed

11 kW	Hz	50Hz		60Hz	
	P	4	6	4	6
	n_1 r/min	1450	980	1750	1165

50Hz						60Hz						Nomenclature				Page of Dimension Sheet		
Output Speed n_2 [r/min]	Output Torque Tout [N·m]	[kgf·m]	Allowable Radial Load Pro [N]	[kgf]	SF	Output Speed n_2 [r/min]	Output Torque Tout [N·m]	[kgf·m]	Allowable Radial Load Pro [N]	[kgf]	SF	Input Capacity Symbol	Frame Size	Reduction Ratio		CNHM CHHM	CNFM CHFM	CNVM CVVM
			22900	2330	0.90				21700	2210	1.03	15 -	6175	- 51		B-103	B-119	B-138
			31300	**3200**	**1.09**				**29600**	**3010**	**1.09**	**15 -**	**6180**	**- 51**		**B-104**	**B-120**	**B-139**
28.4	3510	358	31300	3200	1.37	34.3	2910	296	29600	3010	1.37	15 -	6185	- 51		B-104	B-120	B-139
			44400	4530	1.65				41900	4270	1.65	15 -	6190	- 51		B-104	B-120	B-139
			44400	4530	1.90				41900	4270	1.90	15 -	6195	- 51		B-104	B-120	B-139
			32700	**3330**	**1.09**				**30900**	**3150**	**1.09**	**15 -**	**6185**	**- 59**		**B-104**	**B-120**	**B-139**
24.6	4060	414	46400	4730	1.39	29.7	3360	343	43700	4460	1.39	15 -	6190	- 59		B-104	B-120	B-139
			46400	4730	1.71				43700	4460	1.71	15 -	6195	- 59		B-104	B-120	B-139
			84100	8570	2.05				79900	8150	2.05	15 -	6205	- 59		B-105	B-121	B-140
			34500	3520	0.89				32700	3330	0.89	15 -	6185	- 71		B-104	B-120	B-139
20.4	4890	498	**49100**	**5010**	**1.23**	24.6	4050	413	**46300**	**4720**	**1.23**	**15 -**	**6190**	**- 71**		**B-104**	**B-120**	**B-139**
			49100	5010	1.42				46300	4720	1.42	15 -	6195	- 71		B-104	B-120	B-139
			52700	**5380**	**1.06**				**49700**	**5070**	**1.07**	**15 -**	**6190**	**- 87**		**B-104**	**B-120**	**B-139**
16.7	5990	610	52700	5380	1.24	20.1	4960	506	49700	5070	1.24	15 -	6195	- 87		B-104	B-120	B-139
			84100	8570	1.45				84100	8570	1.45	15 -	6205	- 87		B-105	B-121	B-140
			96600	9850	1.79				91500	9320	1.95	15 -	6215	- 87		B-106	B-121	B-140
	4060	414	40200	4100	*		4060	414	37700	3840	*	15 -	6180DB	- 104		B-111	B-127	B-146
13.9	4900	500	39900	4060	*	16.8	4900	500	37300	3800	*	15 -	6185DB	- 104		B-111	B-127	B-146
	6780	691	**55600**	**5670**	**1.03**		5620	573	**52500**	**5360**	**1.03**	**15 -**	**6195DB**	**- 104**		**B-112**	**B-128**	**B-147**
	4810	490	41700	4250	*		4810	490	40000	4070	*	15 -	6185DB	- 121		B-111	B-127	B-146
	6380	650	59000	6010	*		6380	650	55900	5700	*	15 -	6190DB	- 121		B-112	B-128	B-147
			59000	6010	0.96				55900	5700	1.03	15 -	6195DB	- 121		B-112	B-128	B-147
			84100	**8570**	**1.03**				**84100**	**8570**	**1.03**	**15 -**	**6205DB**	**- 121**		**B-112**	**B-129**	**B-148**
12.0			104000	10600	1.44	14.5			102000	10400	1.74	15 -	6215DB	- 121		B-113	B-130	B-149
	7890	804	114000	11600	1.71		6540	666	108000	11000	2.06	15 -	6225DB	- 121		B-113	B-130	B-149
			143000	14600	2.19				135000	13800	2.19	15 -	6235DA	- 121		B-114	B-131	B-150
			143000	14600	2.37				135000	13800	2.86	15 -	6235DB	- 121		B-114	B-131	B-150
			159000	16200	2.60				151000	15400	3.14	15 -	6245DB	- 121		B-114	B-131	B-150
			195000	19900	2.89				184000	18800	2.89	15 -	6255DA	- 121		B-115	B-132	B-151
	6380	650	58700	5980	*		6380	650	58400	5950	*	15 -	6190DB	- 143		B-112	B-128	B-147
10.1	7630	778	58200	5940	*	12.2	7630	778	57900	5900	*	15 -	6195DB	- 143		B-112	B-128	B-147
	9320	950	57600	5870	0.82		7730	788	57900	5900	0.98	15 -	6195DB	- 143		B-112	B-128	B-147
	6380	650	58900	6000	*		6380	650	58900	6000	*	15 -	6190DB	- 165		B-112	B-128	B-147
	7910	806	58300	5940	*		7910	806	58300	5940	*	15 -	6195DB	- 165		B-112	B-128	B-147
			84100	8570	0.86				84100	8570	1.04	15 -	6205DB	- 165		B-112	B-129	B-148
			104000	**10600**	**1.03**				**104000**	**10600**	**1.03**	**15 -**	**6215DA**	**- 165**		**B-112**	**B-130**	**B-148**
			104000	10600	1.13				104000	10600	1.37	15 -	6215DB	- 165		B-113	B-130	B-149
8.79			123000	12600	1.35	10.6			117000	11900	1.62	15 -	6225DB	- 165		B-113	B-130	B-149
	10800	1100	153000	15600	1.82		8910	909	145000	14800	2.19	15 -	6235DA	- 165		B-114	B-131	B-150
			171000	17400	2.19				162000	16500	2.19	15 -	6245DA	- 165		B-114	B-131	B-150
			171000	17400	2.44				162000	16500	2.94	15 -	6245DB	- 165		B-114	B-131	B-150
			209000	21300	2.46				198000	20200	2.46	15 -	6255DA	- 165		B-115	B-132	B-151
			209000	21300	2.90				198000	20200	3.50	15 -	6255DB	- 165		B-115	B-132	B-151
	7910	806	58300	5940	*		7910	806	58300	5940	*	15 -	6195DB	- 195		B-112	B-128	B-147
	9270	945	84100	8570	*		9270	945	84100	8570	*	15 -	6205DB	- 195		B-112	B-129	B-148
			104000	10600	0.93				104000	10600	1.03	15 -	6215DA	- 195		B-112	B-130	B-148
			104000	10600	0.96				104000	10600	1.16	15 -	6215DB	- 195		B-113	B-130	B-149
			129000	13200	0.93				122000	12500	1.03	15 -	6225DA	- 195		B-113	B-130	B-149
7.44			129000	13200	1.14	8.97			122000	12500	1.37	15 -	6225DB	- 195		B-113	B-130	B-149
	12700	1300	161000	16400	1.54		10500	1070	152000	15500	1.86	15 -	6235DA	- 195		B-114	B-131	B-150
			180000	18300	2.06				170000	17300	2.06	15 -	6245DA	- 195		B-114	B-131	B-150
			180000	18300	2.06				170000	17300	2.49	15 -	6245DB	- 195		B-114	B-131	B-150
			220000	22400	2.45				208000	21200	2.46	15 -	6255DA	- 195		B-115	B-132	B-151
			220000	22400	2.45				208000	21200	2.96	15 -	6255DB	- 195		B-115	B-132	B-151

6. "☆" indicates models manufactured with reducer and motor separately mounted on a common baseplate (horizontal shaft direction) or on an adaptor (vertical shaft direction). Consult us for details, including dimensions.
7. Allowable radial load (Pro) is the value at the midpoint of the slow speed shaft.
8. "(K)" indicates models with reduction ratios equal to nominal ratio. Refer to Table A-3 "6000SK Series (Actual Reduction Ratio)" on page A-4 for actual reduction ratio. Indicated reduction ratio is the same as actual reduction ratio for other models.
9. Maintain torque load during operation within "Output torque" in the table for models with "*" in the SF column. They cannot be operated with 100% motor rating.

Selection Tables Gearmotors

n_1: Motor Speed

11 kW	Hz	50Hz		60Hz	
	P	4	6	4	6
	n_1 r/min	1450	980	1750	1165

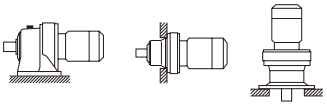

50Hz						60Hz						Nomenclature	Page of Dimension Sheet		
Output Speed n_2 [r/min]	Output Torque Tout [N·m]	[kgf·m]	Allowable Radial Load Pro [N]	[kgf]	SF	Output Speed n_2 [r/min]	Output Torque Tout [N·m]	[kgf·m]	Allowable Radial Load Pro [N]	[kgf]	SF	Input Capacity Symbol - Frame Size - Reduction Ratio	CNHM CHHM	CNFM CHFM	CNVM CVVM
6.28	9270	945	84100	8570	*	7.58	9270	945	84100	8570	*	15 - 6205DB - 231	B-112	B-129	B-148
	12500	1270	104000	10600	*		12500	1270	104000	10600	*	15 - 6215DA - 231	B-112	B-130	B-148
	15100	1540	104000	10600	0.83		12500	1270	104000	10600	1.00	15 - 6215DA - 231	B-112	B-130	B-148
			137000	14000	0.98				130000	13300	1.08	15 - 6225DA - 231	B-113	B-130	B-149
			137000	14000	0.98				130000	13300	1.19	15 - 6225DB - 231	B-113	B-130	B-149
			172000	17500	1.25				163000	16600	1.51	15 - 6235DA - 231	B-114	B-131	B-150
			191000	19500	1.71				181000	18500	2.07	15 - 6245DA - 231	B-114	B-131	B-150
			233000	23800	2.06				221000	22500	2.48	15 - 6255DA - 231	B-115	B-132	B-151
5.31	12500	1270	104000	10600	*	6.41	12500	1270	104000	10600	*	15 - 6215DA - 273	B-112	B-130	B-148
	14800	1510	145000	14700	*		14800	1510	137000	13900	*	15 - 6225DA - 273	B-113	B-130	B-149
	17800	1810	144000	14700	0.83		14700	1500	137000	13900	1.00	15 - 6225DA - 273	B-113	B-130	B-149
			179000	**18200**	**1.06**				**171000**	**17400**	**1.28**	**15 - 6235DA - 273**	**B-114**	**B-131**	**B-150**
			201000	20500	1.45				190000	19400	1.75	15 - 6245DA - 273	B-114	B-131	B-150
			245000	25000	1.74				232000	23600	2.10	15 - 6255DA - 273	B-115	B-132	B-151
			276000	28100	2.58				276000	28100	3.12	15 - 6265DA - 273	B-115	B-132	B-151
4.55	12700	1290	104000	10600	*	5.49	12700	1290	104000	10600	*	15 - 6215DA - 319	B-112	B-130	B-148
	15000	1530	145000	14800	*		15000	1530	142000	14500	*	15 - 6225DA - 319	B-113	B-130	B-149
	20800	2120	179000	18200	0.91		17200	1760	177000	18100	1.10	15 - 6235DA - 319	B-114	B-131	B-150
			208000	21200	1.24				198000	20200	1.50	15 - 6245DA - 319	B-114	B-131	B-150
			258000	26300	1.56				244000	24900	1.88	15 - 6255DA - 319	B-115	B-132	B-151
			276000	28100	2.21				276000	28100	2.67	15 - 6265DA - 319	B-115	B-132	B-151
3.85	15000	1530	145000	14800	*	4.64	15000	1530	145000	14800	*	15 - 6225DA - 377	B-113	B-130	B-149
	18900	1930	179000	18200	*		18900	1930	179000	18200	*	15 - 6235DA - 377	B-114	B-131	B-150
	24600	2510	**208000**	**21200**	**1.05**		20400	2080	**208000**	**21200**	**1.27**	**15 - 6245DA - 377**	**B-114**	**B-131**	**B-150**
			258000	26300	1.32				256000	26100	1.59	15 - 6255DA - 377	B-115	B-132	B-151
			276000	28100	1.87				276000	28100	2.26	15 - 6265DA - 377	B-115	B-132	B-151
			248000	25300	2.77				248000	25300	3.35	15 - 6275DA - 377	B-115	-	B-151
3.07	20500	2090	179000	18200	*	3.70	20500	2090	179000	18200	*	15 - 6235DA - 473	B-114	B-131	B-150
	30800	3140	208000	21200	0.84		25600	2600	208000	21200	1.01	15 - 6245DA - 473	B-114	B-131	B-150
			258000	26300	1.12				258000	26300	1.35	15 - 6255DA - 473	B-115	B-132	B-151
			276000	28100	1.49				276000	28100	1.80	15 - 6265DA - 473	B-115	B-132	B-151
			248000	25300	2.21				248000	25300	2.67	15 - 6275DA - 473	B-115	-	B-151
2.59	25800	2630	208000	21200	*	3.13	25800	2630	208000	21200	*	15 - 6245DA - 559	B-114	B-131	B-150
	36400	3720	258000	26300	0.95		30200	3080	258000	26300	1.14	15 - 6255DA - 559	B-115	B-132	B-151
			276000	28100	1.26				276000	28100	1.52	15 - 6265DA - 559	B-115	B-132	B-151
			248000	25300	1.87				248000	25300	2.26	15 - 6275DA - 559	B-115	-	B-151
2.23	25800	2630	208000	21200	*	2.70	25800	2630	208000	21200	*	15 - 6245DA - 649	B-114	B-131	B-150
	34500	3520	258000	26300	*		34500	3520	258000	26300	*	15 - 6255DA - 649	B-115	B-132	B-151
	42300	4310	258000	26300	0.82		35100	3570	258000	26300	0.98	15 - 6255DA - 649	B-115	B-132	B-151
			276000	28100	1.09				276000	28100	1.31	15 - 6265DA - 649	B-115	B-132	B-151
			248000	25300	1.61				248000	25300	1.95	15 - 6275DA - 649	B-115	-	B-151
1.98	34500	3520	258000	26300	*	2.39	34500	3520	258000	26300	*	15 - 6255DA - 731	B-115	B-132	B-151
	47700	4860	276000	28100	0.97		39500	4030	276000	28100	1.16	15 - 6265DA - 731	B-115	B-132	B-151
			248000	25300	1.43				248000	25300	1.73	15 - 6275DA - 731	B-115	-	B-151
1.72	32500	3310	258000	26300	*	2.08	32500	3310	258000	26300	*	15 - 6255DA - 841	B-115	B-132	B-151
	54800	5590	276000	28100	0.84		45400	4630	276000	28100	1.01	15 - 6265DA - 841	B-115	B-132	B-151
			248000	25300	1.24				248000	25300	1.50	15 - 6275DA - 841	B-115	-	B-151
1.45	46000	4690	276000	28100	*	1.74	46000	4690	276000	28100	*	15 - 6265DA - 1003	B-115	B-132	B-151
	65400	6670	**248000**	**25300**	**1.04**		54200	5520	**248000**	**25300**	**1.26**	**15 - 6275DA - 1003**	**B-115**	**-**	**B-151**
1.16	81300	8290	248000	25300	0.84	1.40	67400	6870	248000	25300	1.01	15 - 6275DA - 1247	B-115	-	B-151
0.980	68200	6950	245000	25000	*	1.18	68200	6950	245000	25000	*	15 - 6275DA - 1479	B-115	-	B-151

1. Combinations in **bold** are the recommended models for operations for 10 hours/day with uniform load (service factor is about 1.0 for motor rating at 50Hz).
2. Motor slippage may affect n_1 and n_2. Refer to technical data for details.
3. CNHM, CHHM, CNFM, CHFM, CNVM, and CVVM indicate types. Refer to page B-10 for details.
4. Lubrication method is different for each model. Refer to "Lubrication" section in page F-4~F-5 for details.
5. "6" at the end of "input capacity symbol" indicates models with 6P motor. Other models come with 4P motor.

Selection Tables Gearmotors

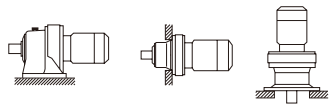

n_1: Motor Speed

15 kW	Hz	50Hz		60Hz	
	P	4	6	4	6
	n_1 r/min	1450	980	1750	1165

50Hz						60Hz						Nomenclature				Page of Dimension Sheet		
Output Speed n_2 [r/min]	Output Torque Tout [N·m]	[kgf·m]	Allowable Radial Load Pro [N]	[kgf]	SF	Output Speed n_2 [r/min]	Output Torque Tout [N·m]	[kgf·m]	Allowable Radial Load Pro [N]	[kgf]	SF	Input Capacity Symbol	– Frame Size	– Reduction Ratio		CNHM CHHM	CNFM CHFM	CNVM CVVM
			9200	**938**	**1.01**				**8730**	**889**	**1.01**	**20 -**	**6145**	**- 6**		**B-102**	**B-118**	**B-137**
			10200	1040	1.35				9670	986	1.35	20 -	6160	- 6		B-103	B-119	B-138
242	563	57.4	10200	1040	1.61	292	467	47.6	9670	986	1.61	20 -	6165	- 6		B-103	B-119	B-138
			11600	1180	1.84				10900	1110	1.84	20 -	6170	- 6		B-103	B-119	B-138
			11600	1180	2.01				10900	1110	2.01	20 -	6175	- 6		B-103	B-119	B-138
			10200	**1040**	**1.01**				**9660**	**984**	**1.01**	**20 -**	**6145**	**- 8**		**B-102**	**B-118**	**B-137**
			11400	1170	1.31				10800	1100	1.31	20 -	6160	- 8		B-103	B-119	B-138
181	751	76.5	11400	1170	1.61	219	622	63.4	10800	1100	1.61	20 -	6165	- 8		B-103	B-119	B-138
			12800	1310	1.84				12100	1230	1.84	20 -	6170	- 8		B-103	B-119	B-138
			12800	1310	2.01				12100	1230	2.01	20 -	6175	- 8		B-103	B-119	B-138
			11400	**1160**	**1.01**				**10800**	**1100**	**1.01**	**20 -**	**6145**	**- 11**		**B-102**	**B-118**	**B-137**
			12900	1320	1.31				12200	1240	1.31	20 -	6160	- 11		B-103	B-119	B-138
			12900	1320	1.61				12200	1240	1.61	20 -	6165	- 11		B-103	B-119	B-138
132	1030	105	14700	1500	1.84	159	855	87.2	13900	1420	1.84	20 -	6170	- 11		B-103	B-119	B-138
			14700	1500	2.01				13900	1420	2.01	20 -	6175	- 11		B-103	B-119	B-138
			19600	2000	2.35				18500	1880	2.35	20 -	6180	- 11		B-104	B-120	B-139
			19600	2000	2.60				18500	1880	2.60	20 -	6185	- 11		B-104	B-120	B-139
			27500	2800	2.73				25800	2630	2.73	20 -	6190	- 11		B-104	B-120	B-139
			11600	**1190**	**1.01**				**11000**	**1130**	**1.01**	**20 -**	**6145**	**- 13**		**B-102**	**B-118**	**B-137**
			13500	1370	1.31				12700	1300	1.31	20 -	6160	- 13		B-103	B-119	B-138
			13500	1370	1.51				12700	1300	1.51	20 -	6165	- 13		B-103	B-119	B-138
112	1220	124	15300	1560	1.82	135	1010	103	14500	1470	1.82	20 -	6170	- 13		B-103	B-119	B-138
			15300	1560	2.01				14500	1470	2.01	20 -	6175	- 13		B-103	B-119	B-138
			20400	2080	2.35				19200	1960	2.35	20 -	6180	- 13		B-104	B-120	B-139
			20400	2080	2.60				19200	1960	2.60	20 -	6185	- 13		B-104	B-120	B-139
			28600	2910	2.73				26900	2740	2.73	20 -	6190	- 13		B-104	B-120	B-139
			12100	1240	0.97				11500	1170	1.01	20 -	6145	- 15		B-102	B-118	B-137
			14200	**1450**	**1.25**				**13500**	**1370**	**1.25**	**20 -**	**6160**	**- 15**		**B-103**	**B-119**	**B-138**
			14200	1450	1.49				13500	1370	1.51	20 -	6165	- 15		B-103	B-119	B-138
96.7	1410	144	16100	1640	1.70	117	1170	119	15200	1550	1.70	20 -	6170	- 15		B-103	B-119	B-138
			16100	1640	2.01				15200	1550	2.01	20 -	6175	- 15		B-103	B-119	B-138
			21600	2200	2.16				20300	2070	2.16	20 -	6180	- 15		B-104	B-120	B-139
			21600	2200	2.60				20300	2070	2.60	20 -	6185	- 15		B-104	B-120	B-139
			30000	3060	2.73				28200	2880	2.73	20 -	6190	- 15		B-104	B-120	B-139
			12600	1290	0.80				12000	1220	0.80	20 -	6145	- 17		B-102	B-118	B-137
			14600	**1490**	**1.25**				**13900**	**1410**	**1.25**	**20 -**	**6165**	**- 17**		**B-103**	**B-119**	**B-138**
			16700	1700	1.31				15800	1610	1.31	20 -	6170	- 17		B-103	B-119	B-138
85.3	1600	163	16700	1700	1.61	103	1320	135	15800	1610	1.61	20 -	6175	- 17		B-103	B-119	B-138
			22700	2320	2.04				21400	2180	2.04	20 -	6180	- 17		B-104	B-120	B-139
			22700	2320	2.55				21400	2180	2.60	20 -	6185	- 17		B-104	B-120	B-139
			31600	3220	2.73				29800	3030	2.73	20 -	6190	- 17		B-104	B-120	B-139
			15600	**1590**	**1.07**				**14800**	**1510**	**1.07**	**20 -**	**6165**	**- 21**		**B-103**	**B-119**	**B-138**
			17900	1830	1.24				17000	1730	1.30	20 -	6170	- 21		B-103	B-119	B-138
69.0	1970	201	17900	1830	1.57	83.3	1630	166	17000	1730	1.61	20 -	6175	- 21		B-103	B-119	B-138
			24300	2480	2.00				22900	2340	2.00	20 -	6180	- 21		B-104	B-120	B-139
			24300	2480	2.54				22900	2340	2.60	20 -	6185	- 21		B-104	B-120	B-139
			34000	3470	2.73				32000	3260	2.73	20 -	6190	- 21		B-104	B-120	B-139
			16200	1650	0.89				15400	1570	1.01	20 -	6165	- 25		B-103	B-119	B-138
			18500	**1890**	**1.04**				**17500**	**1780**	**1.05**	**20 -**	**6170**	**- 25**		**B-103**	**B-119**	**B-138**
			18500	1890	1.30				17500	1780	1.30	20 -	6175	- 25		B-103	B-119	B-138
58.0	2350	239	25300	2580	1.61	70.0	1940	198	23800	2430	1.61	20 -	6180	- 25		B-104	B-120	B-139
			25300	2580	2.01				23800	2430	2.01	20 -	6185	- 25		B-104	B-120	B-139
			35600	3620	2.35				33500	3410	2.35	20 -	6190	- 25		B-104	B-120	B-139
			35600	3620	2.70				33500	3410	2.70	20 -	6195	- 25		B-104	B-120	B-139

6. "☆" indicates models manufactured with reducer and motor separately mounted on a common baseplate (horizontal shaft direction) or on an adaptor (vertical shaft direction). Consult us for details, including dimensions.
7. Allowable radial load (Pro) is the value at the midpoint of the slow speed shaft.
8. "(K)" indicates models with reduction ratios equal to nominal ratio. Refer to Table A-3 "6000SK Series (Actual Reduction Ratio)" on page A-4 for actual reduction ratio. Indicated reduction ratio is the same as actual reduction ratio for other models.
9. Maintain torque load during operation within "Output torque" in the table for models with "*" in the SF column. They cannot be operated with 100% motor rating.

Selection Tables Gearmotors

n_1: Motor Speed

15 kW	Hz	50Hz		60Hz	
	P	4	6	4	6
	n_1 r/min	1450	980	1750	1165

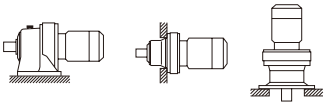

CHHM/CNHM CHFM/CNFM CVVM/CNVM

50Hz						60Hz						Nomenclature				Page of Dimension Sheet		
Output Speed n_2 [r/min]	Output Torque Tout [N·m]	[kgf·m]	Allowable Radial Load Pro [N]	[kgf]	SF	Output Speed n_2 [r/min]	Output Torque Tout [N·m]	[kgf·m]	Allowable Radial Load Pro [N]	[kgf]	SF	Input Capacity Symbol	–	Frame Size	– Reduction Ratio	CNHM CHHM	CNFM CHFM	CNVM CVVM
			19400	**1980**	**1.16**				**18400**	**1870**	**1.25**	**20 -**		**6175**	**- 29**	**B-103**	**B-119**	**B-138**
			26400	2690	1.30				24900	2540	1.30	20 -		6180	- 29	B-104	B-120	B-139
50.0	2720	277	26400	2690	1.61	60.3	2260	230	24900	2540	1.61	20 -		6185	- 29	B-104	B-120	B-139
			37400	3810	2.05				35200	3580	2.05	20 -		6190	- 29	B-104	B-120	B-139
			37400	3810	2.52				35200	3580	2.52	20 -		6195	- 29	B-104	B-120	B-139
			20400	2080	0.96				19400	1970	1.01	20 -		6175	- 35	B-103	B-119	B-138
			28100	**2860**	**1.23**				**26500**	**2700**	**1.25**	**20 -**		**6180**	**- 35**	**B-104**	**B-120**	**B-139**
41.4	3280	335	28100	2860	1.51	50.0	2720	277	26500	2700	1.51	20 -		6185	- 35	B-104	B-120	B-139
			39400	4020	1.62				37100	3780	1.62	20 -		6190	- 35	B-104	B-120	B-139
			39400	4020	2.01				37100	3780	2.01	20 -		6195	- 35	B-104	B-120	B-139
			29900	**3050**	**1.01**				**28300**	**2880**	**1.01**	**20 -**		**6180**	**- 43**	**B-104**	**B-120**	**B-139**
			29900	3050	1.24				28300	2880	1.25	20 -		6185	- 43	B-104	B-120	B-139
33.7	4040	411	42300	4310	1.39	40.7	3340	341	39900	4060	1.39	20 -		6190	- 43	B-104	B-120	B-139
			42300	4310	1.81				39900	4060	2.01	20 -		6195	- 43	B-104	B-120	B-139
			77500	7900	2.12				73300	7480	2.12	20 -		6205	- 43	B-105	B-121	B-140
			30900	**3150**	**1.01**				**29200**	**2980**	**1.01**	**20 -**		**6185**	**- 51**	**B-104**	**B-120**	**B-139**
28.4	4790	488	44100	4490	1.21	34.3	3970	404	41500	4230	1.21	20 -		6190	- 51	B-104	B-120	B-139
			44100	4490	1.39				41500	4230	1.39	20 -		6195	- 51	B-104	B-120	B-139
			32100	3270	0.80				30400	3100	0.80	20 -		6185	- 59	B-104	B-120	B-139
			46000	**4690**	**1.02**				**43400**	**4430**	**1.02**	**20 -**		**6190**	**- 59**	**B-104**	**B-120**	**B-139**
24.6	5540	564	46000	4690	1.25	29.7	4590	468	43400	4430	1.25	20 -		6195	- 59	B-104	B-120	B-139
			84100	8570	1.51				79700	8120	1.51	20 -		6205	- 59	B-105	B-121	B-140
			85900	8760	2.26				81300	8290	2.51	20 -		6215	- 59	B-105	B-121	B-140
20.4	6660	679	**48600**	**4960**	**1.04**	24.6	5520	563	**45900**	**4680**	**1.04**	**20 -**		**6195**	**- 71**	**B-104**	**B-120**	**B-139**
			52100	5310	0.91				49200	5010	0.91	20 -		6195	- 87	B-104	B-120	B-139
16.7	8170	832	**84100**	**8570**	**1.06**	20.1	6770	690	**84100**	**8570**	**1.06**	**20 -**		**6205**	**- 87**	**B-105**	**B-121**	**B-140**
			96100	9790	1.31				91000	9280	1.43	20 -		6215	- 87	B-105	B-121	B-140
			102000	10400	1.78				96400	9830	1.78	20 -		6225	- 87☆	B-106	B-122	B-141
			84100	8570	1.13				84100	8570	1.30	206 -		6205	- 59	B-105	B-121	B-140
16.6	8190	835	96200	9800	1.55	19.7	6890	703	91500	9330	1.83	206 -		6215	- 59	B-105	B-121	B-140
			102000	10400	1.94				97000	9890	2.22	206 -		6225	- 59	B-106	B-122	B-141
13.9	6380	650	55800	5690	*	16.8	5770	589	52400	5340	*	20 -		6190DB	- 104	B-112	B-128	B-147
	6970	711	55400	5650	*		5770	589	52400	5340	*	20 -		6195DB	- 104	B-112	B-128	B-147
	7580	773	59000	6010	*		6720	686	55700	5680	*	20 -		6195DB	- 121	B-112	B-128	B-147
	8110	828	84100	8570	*		6720	686	84100	8570	*	20 -		6205DB	- 121	B-112	B-129	B-148
			104000	**10600**	**1.06**				**101000**	**10300**	**1.28**	**20 -**		**6215DB**	**- 121**	**B-113**	**B-129**	**B-149**
			113000	11600	1.25				108000	11000	1.51	20 -		6225DB	- 121	B-113	B-130	B-149
			142000	14500	1.60				135000	13800	1.60	20 -		6235DA	- 121	B-114	B-114	B-150
12.0	10800	1100	142000	14500	1.74	14.5	8910	909	135000	13800	2.10	20 -		6235DB	- 121	B-114	B-114	B-150
			159000	16200	1.91				150000	15300	2.30	20 -		6245DB	- 121	B-114	B-114	B-150
			194000	19800	2.00				184000	18700	2.00	20 -		6255DA	- 121	B-115	B-132	B-151
			194000	19800	2.56				184000	18700	3.08	20 -		6255DB	- 121	B-115	B-132	B-151
			237000	24200	2.91				225000	22900	3.21	20 -		6265DA	- 121	B-115	B-132	B-151
			114000	11600	1.25				108000	11000	1.48	206 -		6225	- 87	B-106	B-122	B-141
11.3	12100	1230	142000	14500	1.42	13.4	10200	1040	135000	13800	1.60	206 -		6235	- 87	B-106	B-122	B-141
			159000	16200	1.87				151000	15400	2.14	206 -		6245	- 87	B-107	B-123	B-142
			196000	19900	2.57				186000	19000	2.86	206 -		6255	- 87	B-107	B-123	B-142

1. Combinations in **bold** are the recommended models for operations for 10 hours/day with uniform load (service factor is about 1.0 for motor rating at 50Hz).
2. Motor slippage may affect n_1 and n_2. Refer to technical data for details.
3. CNHM, CHHM, CNFM, CHFM, CNVM, and CVVM indicate types. Refer to page B-10 for details.
4. Lubrication method is different for each model. Refer to "Lubrication" section in page F-4~F-5 for details.
5. "6" at the end of "input capacity symbol" indicates models with 6P motor. Other models come with 4P motor.

Selection Tables Gearmotors

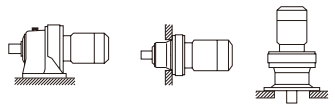

n_1: Motor Speed

15 kW	Hz	50Hz		60Hz	
	P	4	6	4	6
	n_1 r/min	1450	980	1750	1165

50Hz						60Hz						Nomenclature	Page of Dimension Sheet		
Output Speed n_2 [r/min]	Output Torque Tout [N·m]	[kgf·m]	Allowable Radial Load Pro [N]	[kgf]	SF	Output Speed n_2 [r/min]	Output Torque Tout [N·m]	[kgf·m]	Allowable Radial Load Pro [N]	[kgf]	SF	Input Capacity Symbol - Frame Size - Reduction Ratio	CNHM CHHM	CNFM CHFM	CNVM CVVM
	9270	945	84100	8570	*		9160	935	84100	8570	*	20 - 6205DB - 165	B-112	B-129	B-148
	11700	1190	104000	10600	*		9160	935	104000	10600	*	20 - 6215DA - 165	B-112	B-129	B-148
			104000	10600	0.83				104000	10600	1.00	20 - 6215DB - 165	B-113	B-129	B-149
			122000	12500	0.98				116000	11800	1.19	20 - 6225DB - 165	B-113	B-130	B-149
8.79			152000	15500	1.34	10.6			144000	14700	1.60	20 - 6235DA - 165	B-114	B-114	B-150
	14700	1500	170000	17400	1.60		12200	1240	161000	16400	1.60	20 - 6245DA - 165	B-114	B-114	B-150
			170000	17400	1.79				161000	16400	2.16	20 - 6245DB - 165	B-114	B-114	B-150
			209000	21300	2.00				197000	20100	2.00	20 - 6255DA - 165	B-115	B-132	B-151
			209000	21300	2.12				197000	20100	2.56	20 - 6255DB - 165	B-115	B-132	B-151
			254000	25900	2.98				241000	24500	3.20	20 - 6265DA - 165	B-115	B-132	B-151
	11800	1200	104000	10600	*		10800	1100	104000	10600	*	20 - 6215DA - 195	B-112	B-129	B-148
	11800	1200	129000	13200	*		10800	1100	122000	12500	*	20 - 6225DA - 195	B-113	B-113	B-149
			128000	13100	0.84				122000	12400	1.01	20 - 6225DB - 195	B-113	B-130	B-149
			160000	16300	1.13				151000	15400	1.37	20 - 6235DA - 195	B-114	B-114	B-150
7.44			179000	18200	1.50	8.97			169000	17200	1.50	20 - 6245DA - 195	B-114	B-114	B-150
	17300	1770	179000	18200	1.51		14400	1460	169000	17200	1.83	20 - 6245DB - 195	B-114	B-114	B-150
			219000	22300	1.80				207000	21100	2.00	20 - 6255DA - 195	B-115	B-132	B-151
			219000	22300	1.80				207000	21100	2.17	20 - 6255DB - 195	B-115	B-132	B-151
			267000	27200	2.52				253000	25800	3.04	20 - 6265DA - 195	B-115	B-132	B-151
	14800	1510	137000	14000	*		13500	1380	130000	13200	*	20 - 6225DA - 231	B-113	B-113	B-149
			171000	17400	0.92				162000	16500	1.11	20 - 6235DA - 231	B-114	B-114	B-150
6.28	20500	2090	190000	19400	1.26	7.58	17000	1730	180000	18400	1.52	20 - 6245DA - 231	B-114	B-114	B-150
			232000	23700	1.51				220000	22400	1.82	20 - 6255DA - 231	B-115	B-132	B-151
			276000	28100	2.24				269000	27400	2.70	20 - 6265DA - 231	B-115	B-132	B-151
	18900	1930	179000	18200	*		18900	1930	170000	17300	*	20 - 6235DA - 273	B-114	B-114	B-150
5.31			**200000**	**20300**	**1.06**	6.41			**189000**	**19300**	**1.28**	**20 - 6245DA - 273**	**B-114**	**B-114**	**B-150**
	24300	2470	244000	24900	1.28		20100	2050	231000	23500	1.54	20 - 6255DA - 273	B-115	B-132	B-151
			276000	28100	1.90				276000	28100	2.29	20 - 6265DA - 273	B-115	B-132	B-151
	18900	1930	179000	18200	*		18900	1930	177000	18100	*	20 - 6235DA - 319	B-114	B-114	B-150
			208000	21200	0.91				197000	20100	1.10	20 - 6245DA - 319	B-114	B-114	B-150
4.55	28400	2890	256000	26100	1.14	5.49	23500	2400	243000	24800	1.38	20 - 6255DA - 319	B-115	B-132	B-151
			276000	28100	1.62				276000	28100	1.96	20 - 6265DA - 319	B-115	B-132	B-151
			248000	25300	2.40				248000	25300	2.90	20 - 6275DA - 319	B-115	-	B-151
	25800	2630	208000	21200	*		25800	2630	207000	21100	*	20 - 6245DA - 377	B-114	B-114	B-150
3.85			258000	26300	0.97	4.64			255000	26000	1.17	20 - 6255DA - 377	B-115	B-132	B-151
	33500	3420	276000	28100	1.37		27800	2830	276000	28100	1.66	20 - 6265DA - 377	B-115	B-132	B-151
			248000	25300	2.03				248000	25300	2.46	20 - 6275DA - 377	B-115	-	B-151
	25800	2630	208000	21200	*		25800	2630	208000	21200	*	20 - 6245DA - 473	B-114	B-114	B-150
	34500	3520	258000	26300	*		34500	3520	258000	26300	*	20 - 6255DA - 473	B-115	B-132	B-151
3.07			258000	26300	0.82	3.70			258000	26300	0.98	20 - 6255DA - 473	B-115	B-132	B-151
	42100	4290	258000	26300	0.82		34800	3550	258000	26300	0.98	20 - 6255DB - 473	B-115	B-132	B-151
			276000	28100	1.09				276000	28100	1.32	20 - 6265DA - 473	B-115	B-132	B-151
			248000	25300	1.62				248000	25300	1.96	20 - 6275DA - 473	B-115	-	B-151
	34500	3520	258000	26300	*		34500	3520	258000	26300	*	20 - 6255DA - 559	B-115	B-132	B-151
2.59	49700	5070	276000	28100	0.93	3.13	41200	4200	276000	28100	1.12	20 - 6265DA - 559	B-115	B-132	B-151
			248000	25300	1.37				248000	25300	1.66	20 - 6275DA - 559	B-115	-	B-151
	46000	4690	276000	28100	*		46000	4690	276000	28100	*	20 - 6265DA - 649	B-115	B-132	B-151
2.23	57700	5880	276000	28100	0.80	2.70	47800	4870	276000	28100	0.96	20 - 6265DA - 649	B-115	B-132	B-151
			248000	25300	1.18				248000	25300	1.43	20 - 6275DA - 649	B-115	-	B-151
1.98	46000	4690	276000	28100	*	2.39	46000	4690	276000	28100	*	20 - 6265DA - 731	B-115	B-132	B-151
	65000	6630	**248000**	**25300**	**1.05**		53900	5490	**248000**	**25300**	**1.27**	**20 - 6275DA - 731**	**B-115**	**-**	**B-151**
1.72	46000	4690	276000	28100	*	2.08	46000	4690	276000	28100	*	20 - 6265DA - 841	B-115	B-132	B-151
	74800	7620	248000	25300	0.91		62000	6320	248000	25300	1.10	20 - 6275DA - 841	B-115	-	B-151
1.45	68200	6950	248000	25300	*	1.74	68200	6950	248000	25300	*	20 - 6275DA - 1003	B-115	-	B-151
1.16	68200	6950	248000	25300	*	1.40	68200	6950	248000	25300	*	20 - 6275DA - 1247	B-115	-	B-151

6. "☆" indicates models manufactured with reducer and motor separately mounted on a common baseplate (horizontal shaft direction) or on an adaptor (vertical shaft direction). Consult us for details, including dimensions.
7. Allowable radial load (Pro) is the value at the midpoint of the slow speed shaft.
8. "(K)" indicates models with reduction ratios equal to nominal ratio. Refer to Table A-3 "6000SK Series (Actual Reduction Ratio)" on page A-4 for actual reduction ratio. Indicated reduction ratio is the same as actual reduction ratio for other models.
9. Maintain torque load during operation within "Output torque" in the table for models with "*" in the SF column. They cannot be operated with 100% motor rating.

Selection Tables Gearmotors

n_1: Motor Speed

18.5 kW	Hz	50Hz		60Hz	
	P	4	6	4	6
	n_1 r/min	1450	980	1750	1165

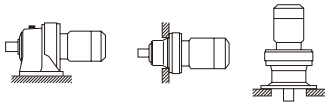

CHHM/CNHM CHFM/CNFM CVVM/CNVM

50Hz						60Hz						Nomenclature				Page of Dimension Sheet		
Output Speed n_2 [r/min]	Output Torque Tout [N·m]	[kgf·m]	Allowable Radial Load Pro [N]	[kgf]	SF	Output Speed n_2 [r/min]	Output Torque Tout [N·m]	[kgf·m]	Allowable Radial Load Pro [N]	[kgf]	SF	Input Capacity Symbol	–	Frame Size	– Reduction Ratio	CNHM CHHM	CNFM CHFM	CNVM CVVM
242	695	70.8	**10200**	**1030**	**1.10**	292	575	58.7	**9590**	**978**	**1.10**	**25**	**-**	**6160**	**- 6**	**B-103**	**B-119**	**B-138**
			10200	1030	1.30				9590	978	1.30	25	-	6165	- 6	B-103	B-119	B-138
			11500	1180	1.49				10900	1110	1.49	25	-	6170	- 6	B-103	B-119	B-138
			11500	1180	1.63				10900	1110	1.63	25	-	6175	- 6	B-103	B-119	B-138
181	926	94.4	**11300**	**1150**	**1.06**	219	767	78.2	**10700**	**1090**	**1.06**	**25**	**-**	**6160**	**- 8**	**B-103**	**B-119**	**B-138**
			11300	1150	1.30				10700	1090	1.30	25	-	6165	- 8	B-103	B-119	B-138
			12700	1300	1.49				12000	1220	1.49	25	-	6170	- 8	B-103	B-119	B-138
			12700	1300	1.63				12000	1220	1.63	25	-	6175	- 8	B-103	B-119	B-138
132	1270	130	**12700**	**1300**	**1.06**	159	1060	108	**12100**	**1230**	**1.06**	**25**	**-**	**6160**	**- 11**	**B-103**	**B-119**	**B-138**
			12700	1300	1.30				12100	1230	1.30	25	-	6165	- 11	B-103	B-119	B-138
			14600	1490	1.49				13800	1410	1.49	25	-	6170	- 11	B-103	B-119	B-138
			14600	1490	1.63				13800	1410	1.63	25	-	6175	- 11	B-103	B-119	B-138
			19500	1990	1.90				18400	1880	1.90	25	-	6180	- 11	B-104	B-120	B-139
			19500	1990	2.11				18400	1880	2.11	25	-	6185	- 11	B-104	B-120	B-139
			27400	2790	2.22				25800	2630	2.22	25	-	6190	- 11	B-104	B-120	B-139
			27400	2790	2.60				25800	2630	2.60	25	-	6195	- 11	B-104	B-120	B-139
112	1500	153	**13300**	**1350**	**1.06**	135	1250	127	**12600**	**1280**	**1.06**	**25**	**-**	**6160**	**- 13**	**B-103**	**B-119**	**B-138**
			13300	1350	1.22				12600	1280	1.22	25	-	6165	- 13	B-103	B-119	B-138
			15200	1550	1.48				14300	1460	1.48	25	-	6170	- 13	B-103	B-119	B-138
			15200	1550	1.63				14300	1460	1.63	25	-	6175	- 13	B-103	B-119	B-138
			20300	2070	1.90				19100	1950	1.90	25	-	6180	- 13	B-104	B-120	B-139
			20300	2070	2.11				19100	1950	2.11	25	-	6185	- 13	B-104	B-120	B-139
			28500	2900	2.22				26800	2730	2.22	25	-	6190	- 13	B-104	B-120	B-139
			28500	2900	2.60				26800	2730	2.60	25	-	6195	- 13	B-104	B-120	B-139
96.7	1740	177	**14000**	**1430**	**1.01**	117	1440	147	**13300**	**1350**	**1.01**	**25**	**-**	**6160**	**- 15**	**B-103**	**B-119**	**B-138**
			14000	1430	1.21				13300	1350	1.22	25	-	6165	- 15	B-103	B-119	B-138
			15800	1620	1.38				15000	1530	1.38	25	-	6170	- 15	B-103	B-119	B-138
			15800	1620	1.63				15000	1530	1.63	25	-	6175	- 15	B-103	B-119	B-138
			21400	2180	1.75				20200	2060	1.75	25	-	6180	- 15	B-104	B-120	B-139
			21400	2180	2.11				20200	2060	2.11	25	-	6185	- 15	B-104	B-120	B-139
			29900	3050	2.22				28100	2870	2.22	25	-	6190	- 15	B-104	B-120	B-139
			29900	3050	2.60				28100	2870	2.60	25	-	6195	- 15	B-104	B-120	B-139
85.3	1970	201	**14400**	**1460**	**1.02**	103	1630	166	**13600**	**1390**	**1.02**	**25**	**-**	**6165**	**- 17**	**B-103**	**B-119**	**B-138**
			16500	1680	1.06				15600	1590	1.06	25	-	6170	- 17	B-103	B-119	B-138
			16500	1680	1.30				15600	1590	1.30	25	-	6175	- 17	B-103	B-119	B-138
			22600	2300	1.65				21300	2170	1.65	25	-	6180	- 17	B-104	B-120	B-139
			22600	2300	2.06				21300	2170	2.11	25	-	6185	- 17	B-104	B-120	B-139
			31500	3210	2.22				29700	3020	2.22	25	-	6190	- 17	B-104	B-120	B-139
			31500	3210	2.60				29700	3020	2.60	25	-	6195	- 17	B-104	B-120	B-139
69.0	2430	248	15300	1550	0.86	83.3	2010	205	14500	1480	0.87	25	-	6165	- 21	B-103	B-119	B-138
			17700	**1800**	**1.01**				**16800**	**1710**	**1.05**	**25**	**-**	**6170**	**- 21**	**B-103**	**B-119**	**B-138**
			17700	1800	1.28				16800	1710	1.30	25	-	6175	- 21	B-103	B-119	B-138
			24200	2470	1.62				22800	2330	1.62	25	-	6180	- 21	B-104	B-120	B-139
			24200	2470	2.06				22800	2330	2.11	25	-	6185	- 21	B-104	B-120	B-139
			33900	3450	2.22				31900	3250	2.22	25	-	6190	- 21	B-104	B-120	B-139
			33900	3450	2.60				31900	3250	2.60	25	-	6195	- 21	B-104	B-120	B-139
58.0	2890	295	**18200**	**1860**	**1.05**	70.0	2400	244	**17300**	**1760**	**1.05**	**25**	**-**	**6175**	**- 25**	**B-103**	**B-119**	**B-138**
			25100	2560	1.30				23700	2410	1.30	25	-	6180	- 25	B-104	B-120	B-139
			25100	2560	1.63				23700	2410	1.63	25	-	6185	- 25	B-104	B-120	B-139
			35400	3610	1.90				33300	3400	1.90	25	-	6190	- 25	B-104	B-120	B-139
			35400	3610	2.19				33300	3400	2.19	25	-	6195	- 25	B-104	B-120	B-139

1. Combinations in **bold** are the recommended models for operations for 10 hours/day with uniform load (service factor is about 1.0 for motor rating at 50Hz).
2. Motor slippage may affect n_1 and n_2. Refer to technical data for details.
3. CNHM, CHHM, CNFM, CHFM, CNVM, and CVVM indicate types. Refer to page B-10 for details.
4. Lubrication method is different for each model. Refer to "Lubrication" section in page F-4~F-5 for details.
5. "6" at the end of "input capacity symbol" indicates models with 6P motor. Other models come with 4P motor.

Selection Tables Gearmotors

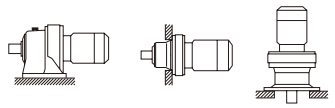

n_1: Motor Speed

18.5 kW	Hz	50Hz		60Hz	
	P	4	6	4	6
	n_1 r/min	1450	980	1750	1165

50Hz						60Hz						Nomenclature				Page of Dimension Sheet		
Output Speed n_2 [r/min]	Output Torque Tout [N·m]	[kgf·m]	Allowable Radial Load Pro [N]	[kgf]	SF	Output Speed n_2 [r/min]	Output Torque Tout [N·m]	[kgf·m]	Allowable Radial Load Pro [N]	[kgf]	SF	Input Capacity Symbol	–	Frame Size	– Reduction Ratio	CNHM CHHM	CNFM CHFM	CNVM CVVM
			19000	1940	0.94				18100	1840	1.02	25 -		6175	- 29	B-103	B-119	B-138
			26100	**2660**	**1.05**				**24700**	**2520**	**1.05**	**25 -**		**6180**	**- 29**	**B-104**	**B-120**	**B-139**
50.0	3360	342	26100	2660	1.30	60.3	2780	284	24700	2520	1.30	25 -		6185	- 29	B-104	B-120	B-139
			37200	3790	1.66				35000	3570	1.66	25 -		6190	- 29	B-104	B-120	B-139
			37200	3790	2.04				35000	3570	2.04	25 -		6195	- 29	B-104	B-120	B-139
			68700	7000	2.47				65000	6630	2.47	25 -		6205	- 29	B-105	B-121	B-140
			27800	**2830**	**1.00**				**26300**	**2680**	**1.02**	**25 -**		**6180**	**- 35**	**B-104**	**B-120**	**B-139**
41.4	4050	413	27800	2830	1.22	50.0	3360	342	26300	2680	1.22	25 -		6185	- 35	B-104	B-120	B-139
			39200	3990	1.31				36900	3760	1.31	25 -		6190	- 35	B-104	B-120	B-139
			39200	3990	1.63				36900	3760	1.63	25 -		6195	- 35	B-104	B-120	B-139
			29500	**3010**	**1.01**				**28000**	**2850**	**1.02**	**25 -**		**6185**	**- 43**	**B-104**	**B-120**	**B-139**
			42000	4290	1.13				39600	4040	1.13	25 -		6190	- 43	B-104	B-120	B-139
33.7	4980	507	42000	4290	1.46	40.7	4120	420	39600	4040	1.63	25 -		6195	- 43	B-104	B-120	B-139
			77300	7880	1.72				73200	7460	1.72	25 -		6205	- 43	B-105	B-121	B-140
			78900	8050	2.44				74700	7620	2.44	25 -		6215	- 43	B-105	B-121	B-140
			30400	3100	0.82				28900	2940	0.82	25 -		6185	- 51	B-104	B-120	B-139
28.4	5900	602	43700	4460	0.98	34.3	4890	499	41300	4210	0.98	25 -		6190	- 51	B-104	B-120	B-139
			43700	**4460**	**1.13**				**41300**	**4210**	**1.13**	**25 -**		**6195**	**- 51**	**B-104**	**B-120**	**B-139**
			45700	**4660**	**1.02**				**43100**	**4400**	**1.02**	**25 -**		**6195**	**- 59**	**B-104**	**B-120**	**B-139**
24.6	6830	696	83900	8550	1.22	29.7	5660	577	79400	8100	1.22	25 -		6205	- 59	B-105	B-121	B-140
			85600	8730	1.83				81100	8270	2.04	25 -		6215	- 59	B-105	B-121	B-140
			90800	9250	2.12				86000	8760	2.44	25 -		6225	- 59	B-106	B-122	B-141
			47400	**4830**	**1.08**				**45000**	**4580**	**1.24**	**256 -**		**6195**	**- 43**	**B-104**	**B-120**	**B-139**
22.8	7360	751	88400	9010	1.72	27.1	6190	631	84100	8570	2.04	256 -		6215	- 43	B-105	B-121	B-140
			93700	9550	2.17				89100	9090	2.58	256 -		6225	- 43	B-106	B-122	B-141
20.4	8220	838	48100	4910	0.84	24.6	6810	694	45500	4640	0.84	25 -		6195	- 71	B-104	B-120	B-139
16.7	10100	1030	**95600**	**9740**	**1.06**	20.1	8340	851	**90600**	**9240**	**1.16**	**25 -**		**6215**	**- 87**	**B-105**	**B-121**	**B-140**
			101000	10300	1.44				96100	9790	1.44	25 -		6225	- 87	B-106	B-122	B-141
			95700	9760	1.25				91100	9290	1.49	256 -		6215	- 59	B-105	B-121	B-140
16.6	10100	1030	102000	10300	1.57	19.7	8500	866	96700	9850	1.80	256 -		6225	- 59	B-106	B-122	B-141
			127000	12900	1.87				120000	12300	2.04	256 -		6235	- 59	B-106	B-122	B-142
			104000	10600	0.86				101000	10300	1.03	25 -		6215DB	- 121	B-113	B-130	B-149
			113000	**11500**	**1.01**				**107000**	**10900**	**1.22**	**25 -**		**6225DB**	**- 121**	**B-113**	**B-130**	**B-149**
			142000	14500	1.30				134000	13700	1.30	25 -		6235DA	- 121	B-114	B-131	B-150
12.0	13300	1350	142000	14500	1.41	14.5	11000	1120	134000	13700	1.70	25 -		6235DB	- 121	B-114	B-131	B-150
			158000	16100	1.55				150000	15300	1.87	25 -		6245DB	- 121	B-114	B-131	B-150
			194000	19800	1.62				184000	18700	1.62	25 -		6255DA	- 121	B-115	B-132	B-151
			194000	19800	2.07				184000	18700	2.50	25 -		6255DB	- 121	B-115	B-132	B-151
			237000	24200	2.36				224000	22900	2.60	25 -		6265DA	- 121	B-115	B-132	B-151
			113000	**11500**	**1.01**				**108000**	**11000**	**1.20**	**256 -**		**6225**	**- 87**	**B-106**	**B-122**	**B-141**
11.3	14900	1520	142000	14400	1.15	13.4	12500	1280	135000	13700	1.30	256 -		6235	- 87	B-106	B-122	B-142
			159000	16200	1.52				151000	15400	1.74	256 -		6245	- 87	B-107	B-123	B-142
			195000	19900	2.08				186000	18900	2.32	256 -		6255	- 87	B-107	B-123	B-142
	14500	1480	122000	12500	*		14500	1480	115000	11800	*	25 -		6225DB	- 165	B-113	B-130	B-149
			121000	12400	0.80				115000	11800	0.97	25 -		6225DB	- 165	B-113	B-130	B-149
			151000	15400	1.08				144000	14600	1.30	25 -		6235DA	- 165	B-114	B-131	B-150
8.79	18100	1840	170000	17300	1.30	10.6	15000	1530	161000	16400	1.30	25 -		6245DA	- 165	B-114	B-131	B-150
			170000	17300	1.45				161000	16400	1.75	25 -		6245DB	- 165	B-114	B-131	B-150
			208000	21200	1.62				197000	20100	1.62	25 -		6255DA	- 165	B-115	B-132	B-151
			208000	21200	1.72				197000	20100	2.08	25 -		6255DB	- 165	B-115	B-132	B-151
			254000	25900	2.42				240000	24500	2.60	25 -		6265DA	- 165	B-115	B-132	B-151

6. "☆" indicates models manufactured with reducer and motor separately mounted on a common baseplate (horizontal shaft direction) or on an adaptor (vertical shaft direction). Consult us for details, including dimensions.
7. Allowable radial load (Pro) is the value at the midpoint of the slow speed shaft.
8. "(K)" indicates models with reduction ratios equal to nominal ratio. Refer to Table A-3 "6000SK Series (Actual Reduction Ratio)" on page A-4 for actual reduction ratio. Indicated reduction ratio is the same as actual reduction ratio for other models.
9. Maintain torque load during operation within "Output torque" in the table for models with "*" in the SF column. They cannot be operated with 100% motor rating.

Selection Tables Gearmotors

n_1: Motor Speed

18.5 kW	Hz	50Hz		60Hz	
	P	4	6	4	6
	n_1 r/min	1450	980	1750	1165

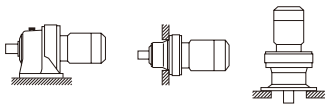

50Hz						60Hz						Nomenclature				Page of Dimension Sheet		
Output Speed n_2 [r/min]	Output Torque Tout [N·m]	[kgf·m]	Allowable Radial Load Pro [N]	[kgf]	SF	Output Speed n_2 [r/min]	Output Torque Tout [N·m]	[kgf·m]	Allowable Radial Load Pro [N]	[kgf]	SF	Input Capacity Symbol	–	Frame Size	– Reduction Ratio	CNHM CHHM	CNFM CHFM	CNVM CVVM
			159000	16200	0.92				151000	15400	1.11	25 -		6235DA	- 195	B-114	B-131	B-150
			178000	**18100**	**1.22**				**169000**	**17200**	**1.22**	**25 -**		**6245DA**	**- 195**	**B-114**	**B-131**	**B-150**
7.44	21400	2180	178000	18100	1.23	8.97	17700	1810	169000	17200	1.48	25 -		6245DB	- 195	B-114	B-131	B-150
			218000	22200	1.46				207000	21100	1.62	25 -		6255DA	- 195	B-115	B-132	B-151
			218000	22200	1.46				207000	21100	1.76	25 -		6255DB	- 195	B-115	B-132	B-151
			267000	27200	2.05				252000	25700	2.47	25 -		6265DA	- 195	B-115	B-132	B-151
	18900	1930	171000	17400	*		18900	1930	162000	16500	*	25 -		6235DA	- 231	B-114	B-131	B-150
6.28			**189000**	**19300**	**1.02**	7.58			**180000**	**18300**	**1.23**	**25 -**		**6245DA**	**- 231**	**B-114**	**B-131**	**B-150**
	25300	2580	232000	23600	1.22		21000	2140	219000	22400	1.48	25 -		6255DA	- 231	B-115	B-132	B-151
			276000	28100	1.82				269000	27400	2.19	25 -		6265DA	- 231	B-115	B-132	B-151
			198000	20200	0.86				188000	19200	1.04	25 -		6245DA	- 273	B-114	B-131	B-150
5.31	29900	3050	**243000**	**24800**	**1.04**	6.41	24800	2530	**230000**	**23500**	**1.25**	**25 -**		**6255DA**	**- 273**	**B-115**	**B-132**	**B-151**
			276000	28100	1.54				276000	28100	1.85	25 -		6265DA	- 273	B-115	B-132	B-151
	25800	2630	208000	21200	*		25800	2630	196000	20000	*	25 -		6245DA	- 319	B-114	B-131	B-150
4.55			255000	26000	0.93	5.49			242000	24600	1.12	25 -		6255DA	- 319	B-115	B-132	B-151
	35000	3570	276000	28100	1.31		29000	2950	276000	28100	1.59	25 -		6265DA	- 319	B-115	B-132	B-151
			248000	25300	1.95				248000	25300	2.35	25 -		6275DA	- 319	B-115	-	B-151
	32500	3310	258000	26300	*		32500	3310	254000	25900	*	25 -		6255DA	- 377	B-115	B-132	B-151
3.85	41300	4210	276000	28100	1.11	4.64	34300	3490	276000	28100	1.34	25 -		6265DA	- 377	B-115	B-132	B-151
			248000	25300	1.65				248000	25300	1.99	25 -		6275DA	- 377	B-115	-	B-151
3.07	51900	5290	276000	28100	0.89	3.70	43000	4380	276000	28100	1.07	25 -		6265DA	- 473	B-115	B-132	B-151
			248000	25300	1.31				248000	25300	1.59	25 -		6275DA	- 473	B-115	-	B-151
2.59	46000	4690	276000	28100	*	3.13	46000	4690	276000	28100	*	25 -		6265DA	- 559	B-115	B-132	B-151
	61300	6250	248000	25300	1.11		50800	5180	248000	25300	1.34	25 -		6275DA	- 559	B-115	-	B-151
2.23	71200	7250	248000	25300	0.96	2.70	59000	6010	248000	25300	1.16	25 -		6275DA	- 649	B-115	-	B-151
1.98	80200	8170	248000	25300	0.85	2.39	66400	6770	248000	25300	1.03	25 -		6275DA	- 731	B-115	-	B-151
1.72	68200	6950	248000	25300	*	2.08	68200	6950	248000	25300	*	25 -		6275DA	- 841	B-115	-	B-151

n_1: Motor Speed

22 kW	Hz	50Hz		60Hz	
	P	4	6	4	6
	n_1 r/min	1450	980	1750	1165

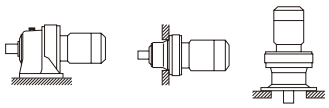

50Hz						60Hz						Nomenclature				Page of Dimension Sheet		
Output Speed n_2 [r/min]	Output Torque Tout [N·m]	[kgf·m]	Allowable Radial Load Pro [N]	[kgf]	SF	Output Speed n_2 [r/min]	Output Torque Tout [N·m]	[kgf·m]	Allowable Radial Load Pro [N]	[kgf]	SF	Input Capacity Symbol	–	Frame Size	– Reduction Ratio	CNHM CHHM	CNFM CHFM	CNVM CVVM
			10100	**1020**	**1.10**				**9510**	**969**	**1.10**	**30 -**		**6165**	**- 6**	**B-103**	**B-119**	**B-138**
242	826	84.2	11500	1170	1.25	292	684	69.8	10800	1100	1.25	30 -		6170	- 6	B-103	B-119	B-138
			11500	1170	1.37				10800	1100	1.37	30 -		6175	- 6	B-103	B-119	B-138
			11200	**1140**	**1.10**				**10600**	**1080**	**1.10**	**30 -**		**6165**	**- 8**	**B-103**	**B-119**	**B-138**
181	1100	112	12600	1290	1.25	219	912	93.0	11900	1220	1.25	30 -		6170	- 8	B-103	B-119	B-138
			12600	1290	1.37				11900	1220	1.37	30 -		6175	- 8	B-103	B-119	B-138

1. Combinations in **bold** are the recommended models for operations for 10 hours/day with uniform load (service factor is about 1.0 for motor rating at 50Hz).
2. Motor slippage may affect n_1 and n_2. Refer to technical data for details.
3. CNHM, CHHM, CNFM, CHFM, CNVM, and CVVM indicate types. Refer to page B-10 for details.
4. Lubrication method is different for each model. Refer to "Lubrication" section in page F-4~F-5 for details.
5. "6" at the end of "input capacity symbol" indicates models with 6P motor. Other models come with 4P motor.

Selection Tables Gearmotors

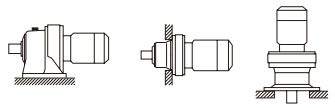

n_1: Motor Speed

22 kW	Hz	50Hz		60Hz	
	P	4	6	4	6
	n_1 r/min	1450	980	1750	1165

50Hz						60Hz						Nomenclature				Page of Dimension Sheet		
Output Speed n_2 [r/min]	Output Torque Tout [N·m]	[kgf·m]	Allowable Radial Load Pro [N]	[kgf]	SF	Output Speed n_2 [r/min]	Output Torque Tout [N·m]	[kgf·m]	Allowable Radial Load Pro [N]	[kgf]	SF	Input Capacity Symbol	– Frame Size	– Reduction Ratio		CNHM CHHM	CNFM CHFM	CNVM CVVM
			12600	**1280**	**1.10**				**11900**	**1220**	**1.10**	**30 -**	**6165**	**- 11**		**B-103**	**B-119**	**B-138**
			14500	1470	1.25				13700	1390	1.25	30 -	6170	- 11		B-103	B-119	B-138
			14500	1470	1.37				13700	1390	1.37	30 -	6175	- 11		B-103	B-119	B-138
132	1510	154	19500	1980	1.60	159	1250	128	18300	1870	1.60	30 -	6180	- 11		B-104	B-120	B-139
			19500	1980	1.77				18300	1870	1.77	30 -	6185	- 11		B-104	B-120	B-139
			27300	2780	1.86				25700	2620	1.86	30 -	6190	- 11		B-104	B-120	B-139
			27300	2780	2.19				25700	2620	2.19	30 -	6195	- 11		B-104	B-120	B-139
			52300	5330	2.71				49500	5040	2.71	30 -	6205	- 11		B-105	B-121	B-140
			13100	**1330**	**1.03**				**12400**	**1270**	**1.03**	**30 -**	**6165**	**- 13**		**B-103**	**B-119**	**B-138**
			15000	1530	1.24				14200	1450	1.24	30 -	6170	- 13		B-103	B-119	B-138
			15000	1530	1.37				14200	1450	1.37	30 -	6175	- 13		B-103	B-119	B-138
112	1790	182	20200	2060	1.60	135	1480	151	19100	1940	1.60	30 -	6180	- 13		B-104	B-120	B-139
			20200	2060	1.77				19100	1940	1.77	30 -	6185	- 13		B-104	B-120	B-139
			28400	2890	1.86				26700	2730	1.86	30 -	6190	- 13		B-104	B-120	B-139
			28400	2890	2.19				26700	2730	2.19	30 -	6195	- 13		B-104	B-120	B-139
			13800	**1400**	**1.02**				**13100**	**1340**	**1.03**	**30 -**	**6165**	**- 15**		**B-103**	**B-119**	**B-138**
			15600	1590	1.16				14800	1510	1.16	30 -	6170	- 15		B-103	B-119	B-138
			15600	1590	1.37				14800	1510	1.37	30 -	6175	- 15		B-104	B-120	B-139
96.7	2060	210	21300	2170	1.47	117	1710	174	20100	2050	1.47	30 -	6180	- 15		B-104	B-120	B-139
			21300	2170	1.77				20100	2050	1.77	30 -	6185	- 15		B-104	B-120	B-139
			29800	3040	1.86				28100	2860	1.86	30 -	6190	- 15		B-104	B-120	B-139
			29800	3040	2.19				28100	2860	2.19	30 -	6195	- 15		B-104	B-120	B-139
			56200	5730	2.71				53200	5420	2.71	30 -	6205	- 15		B-105	B-121	B-140
			14100	1440	0.86				13400	1370	0.86	30 -	6165	- 17		B-103	B-119	B-138
			16200	**1650**	**1.10**				**15400**	**1570**	**1.10**	**30 -**	**6175**	**- 17**		**B-103**	**B-119**	**B-138**
85.3	2340	239	22400	2280	1.39	103	1940	198	21200	2160	1.39	30 -	6180	- 17		B-104	B-120	B-139
			22400	2280	1.74				21200	2160	1.77	30 -	6185	- 17		B-104	B-120	B-139
			31400	3200	1.86				29600	3010	1.86	30 -	6190	- 17		B-104	B-120	B-139
			31400	3200	2.19				29600	3010	2.19	30 -	6195	- 17		B-104	B-120	B-139
			17500	**1780**	**1.07**				**16600**	**1690**	**1.10**	**30 -**	**6175**	**- 21**		**B-103**	**B-119**	**B-138**
			24000	2450	1.36				22700	2310	1.36	30 -	6180	- 21		B-104	B-120	B-139
			24000	2450	1.73				22700	2310	1.77	30 -	6185	- 21		B-104	B-120	B-139
69.0	2890	295	33700	3440	1.86	83.3	2400	244	31800	3240	1.86	30 -	6190	- 21		B-104	B-120	B-139
			33700	3440	2.19				31800	3240	2.19	30 -	6195	- 21		B-104	B-120	B-139
			62900	6410	2.69				59500	6070	2.69	30 -	6205	- 21		B-105	B-121	B-140
			17900	1830	0.89				17000	1740	0.89	30 -	6175	- 25		B-103	B-119	B-138
			24900	**2530**	**1.10**				**23500**	**2400**	**1.10**	**30 -**	**6180**	**- 25**		**B-104**	**B-120**	**B-139**
58.0	3440	351	24900	2530	1.37	70.0	2850	291	23500	2400	1.37	30 -	6185	- 25		B-104	B-120	B-139
			35300	3590	1.60				33200	3390	1.60	30 -	6190	- 25		B-104	B-120	B-139
			35300	3590	1.84				33200	3390	1.84	30 -	6195	- 25		B-104	B-120	B-139
			25900	**2640**	**1.10**				**24500**	**2500**	**1.10**	**30 -**	**6185**	**- 29**		**B-104**	**B-120**	**B-139**
			37000	3770	1.40				34900	3560	1.40	30 -	6190	- 29		B-104	B-120	B-139
50.0	3990	407	37000	3770	1.72	60.3	3310	337	34900	3560	1.72	30 -	6195	- 29		B-104	B-120	B-139
			68500	6990	2.08				64900	6610	2.08	30 -	6205	- 29		B-105	B-121	B-140
			70000	7130	2.66				66200	6750	2.66	30 -	6215	- 29		B-105	B-121	B-140
			27500	**2810**	**1.03**				**26000**	**2650**	**1.03**	**30 -**	**6185**	**- 35**		**B-104**	**B-120**	**B-139**
41.4	4820	491	39000	3970	1.10	50.0	3990	407	36700	3750	1.10	30 -	6190	- 35		B-104	B-120	B-139
			39000	3970	1.37				36700	3750	1.37	30 -	6195	- 35		B-104	B-120	B-139
			29100	2970	0.85				27600	2820	0.85	30 -	6185	- 43		B-104	B-120	B-139
			41800	4260	0.95				39400	4020	0.95	30 -	6190	- 43		B-104	B-120	B-139
			41800	4260	1.23				39400	4020	1.37	30 -	6195	- 43		B-104	B-120	B-139
33.7	5920	603	77100	7860	1.45	40.7	4900	500	73000	7440	1.45	30 -	6205	- 43		B-105	B-121	B-140
			78700	8020	2.05				74600	7600	2.05	30 -	6215	- 43		B-105	B-121	B-140
			83400	8510	2.57				79000	8050	2.57	30 -	6225	- 43		B-106	B-122	B-141
28.4	7020	716	43400	4420	0.95	34.3	5820	593	41000	4180	0.95	30 -	6195	- 51		B-104	B-120	B-139

6. "☆" indicates models manufactured with reducer and motor separately mounted on a common baseplate (horizontal shaft direction) or on an adaptor (vertical shaft direction). Consult us for details, including dimensions.
7. Allowable radial load (Pro) is the value at the midpoint of the slow speed shaft.
8. "(K)" indicates models with reduction ratios equal to nominal ratio. Refer to Table A-3 "6000SK Series (Actual Reduction Ratio)" on page A-4 for actual reduction ratio. Indicated reduction ratio is the same as actual reduction ratio for other models.
9. Maintain torque load during operation within "Output torque" in the table for models with "*" in the SF column. They cannot be operated with 100% motor rating.

Selection Tables Gearmotors

n_1: Motor Speed

22 kW	Hz	50Hz		60Hz	
	P	4	6	4	6
	n_1 r/min	1450	980	1750	1165

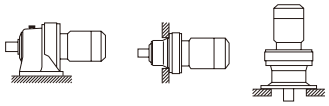

CHHM/CNHM CHFM/CNFM CVVM/CNVM

50Hz						60Hz						Nomenclature				Page of Dimension Sheet		
Output Speed n_2 [r/min]	Output Torque Tout [N·m]	[kgf·m]	Allowable Radial Load Pro [N]	[kgf]	SF	Output Speed n_2 [r/min]	Output Torque Tout [N·m]	[kgf·m]	Allowable Radial Load Pro [N]	[kgf]	SF	Input Capacity Symbol	– Frame Size	– Reduction Ratio		CNHM CHHM	CNFM CHFM	CNVM CVVM
			45300	4620	0.85				42800	4360	0.85	30 -	6195	- 59		B-104	B-120	B-139
24.6	8120	828	**83600**	**8520**	**1.03**	29.7	6730	686	**79200**	**8070**	**1.03**	**30 -**	**6205**	**- 59**		**B-105**	**B-121**	**B-140**
			85300	8690	1.54				80800	8240	1.71	30 -	6215	- 59		B-105	B-121	B-140
			90500	9220	1.79				85700	8740	2.05	30 -	6225	- 59		B-106	B-122	B-141
			84100	**8570**	**1.06**				**82100**	**8370**	**1.26**	**306 -**	**6205**	**- 43**		**B-105**	**B-121**	**B-140**
22.8	8760	893	88000	8970	1.45	27.1	7370	751	83800	8540	1.72	306 -	6215	- 43		B-105	B-121	B-140
			93400	9520	1.83				88900	9060	2.17	306 -	6225	- 43		B-106	B-122	B-141
16.7	12000	1220	**101000**	**10300**	**1.21**	20.1	9920	1010	**95700**	**9760**	**1.21**	**30 -**	**6225**	**- 87**		**B-106**	**B-122**	**B-141**
			95200	**9710**	**1.05**				**90700**	**9250**	**1.25**	**306 -**	**6215**	**- 59**		**B-105**	**B-121**	**B-140**
16.6	12000	1220	101000	10300	1.32	19.7	10100	1030	96300	9810	1.51	306 -	6225	- 59		B-106	B-122	B-141
			141000	14400	2.15				134000	13700	2.55	306 -	6245	- 59		B-107	B-123	B-142
	11400	1160	104000	10600	*		11400	1160	101000	10300	*	30 -	6215DB	- 121		B-113	B-130	B-149
			112000	11400	0.85				106000	10900	1.03	30 -	6225DB	- 121		B-113	B-130	B-149
			141000	**14400**	**1.09**				**134000**	**13700**	**1.09**	**30 -**	**6235DA**	**- 121**		**B-114**	**B-131**	**B-150**
			141000	14400	1.19				134000	13700	1.43	30 -	6235DB	- 121		B-114	B-131	B-150
12.0	15800	1610	157000	16000	1.30	14.5	13100	1330	149000	15200	1.57	30 -	6245DB	- 121		B-114	B-131	B-150
			193000	19700	1.37				183000	18700	1.37	30 -	6255DA	- 121		B-115	B-132	B-151
			193000	19700	1.74				183000	18700	2.10	30 -	6255DB	- 121		B-115	B-132	B-151
			237000	24100	1.99				224000	22800	2.31	30 -	6265DA	- 121		B-115	B-132	B-151
			158000	16100	1.28				150000	15300	1.46	306 -	6245	- 87		B-107	B-123	B-142
11.3	17700	1810	195000	19800	1.75	13.4	14900	1520	185000	18900	1.95	306 -	6255	- 87		B-107	B-123	B-142
			237000	24200	2.43				226000	23000	2.43	306 -	6265	- 87		B-107	B-123	B-142
			151000	15400	0.91				143000	14600	1.10	30 -	6235DA	- 165		B-114	B-131	B-150
			169000	**17200**	**1.09**				**160000**	**16300**	**1.09**	**30 -**	**6245DA**	**- 165**		**B-114**	**B-131**	**B-150**
			169000	17200	1.22				160000	16300	1.47	30 -	6245DB	- 165		B-114	B-131	B-150
8.79	21500	2190	207000	21100	1.37	10.6	17800	1820	196000	20000	1.37	30 -	6255DA	- 165		B-115	B-132	B-151
			207000	21100	1.45				196000	20000	1.75	30 -	6255DB	- 165		B-115	B-132	B-151
			253000	25800	2.03				240000	24400	2.31	30 -	6265DA	- 165		B-115	B-132	B-151
	19600	2000	159000	16200	*		19600	2000	150000	15300	*	30 -	6235DA	- 195		B-114	B-131	B-150
			177000	**18000**	**1.02**				**168000**	**17100**	**1.02**	**30 -**	**6245DA**	**- 195**		**B-114**	**B-131**	**B-150**
			177000	18000	1.03				168000	17100	1.25	30 -	6245DB	- 195		B-114	B-131	B-150
7.44	25400	2590	218000	22200	1.23	8.97	21100	2150	206000	21000	1.37	30 -	6255DA	- 195		B-115	B-132	B-151
			218000	22200	1.23				206000	21000	1.48	30 -	6255DB	- 195		B-115	B-132	B-151
			266000	27100	1.72				252000	25700	2.08	30 -	6265DA	- 195		B-115	B-132	B-151
			188000	19200	0.86				179000	18200	1.03	30 -	6245DA	- 231		B-114	B-131	B-150
6.28	30100	3070	**231000**	**23500**	**1.03**	7.58	25000	2540	**219000**	**22300**	**1.24**	**30 -**	**6255DA**	**- 231**		**B-115**	**B-132**	**B-151**
			276000	28100	1.53				268000	27300	1.84	30 -	6265DA	- 231		B-115	B-132	B-151
	25800	2630	199000	20300	*		25800	2630	188000	19200	*	30 -	6245DA	- 273		B-114	B-131	B-150
5.31	35600	3630	242000	24700	0.87	6.41	29500	3010	229000	23400	1.05	30 -	6255DA	- 273		B-115	B-132	B-151
			276000	28100	1.29				276000	28100	1.56	30 -	6265DA	- 273		B-115	B-132	B-151
	32500	3310	255000	26000	*		32500	3310	241000	24600	*	30 -	6255DA	- 319		B-115	B-132	B-151
4.55	41600	4240	276000	28100	1.11	5.49	34500	3510	276000	28100	1.33	30 -	6265DA	- 319		B-115	B-132	B-151
			248000	25300	1.64				248000	25300	1.98	30 -	6275DA	- 319		B-115	-	B-151
3.85	49200	5010	276000	28100	0.94	4.64	40700	4150	276000	28100	1.13	30 -	6265DA	- 377		B-115	B-132	B-151
			248000	25300	1.39				248000	25300	1.67	30 -	6275DA	- 377		B-115	-	B-151
3.07	46000	4690	276000	28100	*	3.70	46000	4690	276000	28100	*	30 -	6265DA	- 473		B-115	B-132	B-151
	61700	6290	248000	25300	1.11		51100	5210	248000	25300	1.33	30 -	6275DA	- 473		B-115	-	B-151
2.59	72900	7430	248000	25300	0.94	3.13	60400	6160	248000	25300	1.13	30 -	6275DA	- 559		B-115	-	B-151
2.23	68200	6950	248000	25300	*	2.70	68200	6950	248000	25300	*	30 -	6275DA	- 649		B-115	-	B-151
	84600	8630	248000	25300	0.81		70100	7150	248000	25300	0.97	30 -	6275DA	- 649		B-115	-	B-151
1.98	68200	6950	248000	25300	*	2.39	68200	6950	248000	25300	*	30 -	6275DA	- 731		B-115	-	B-151

1. Combinations in **bold** are the recommended models for operations for 10 hours/day with uniform load (service factor is about 1.0 for motor rating at 50Hz).
2. Motor slippage may affect n_1 and n_2. Refer to technical data for details.
3. CNHM, CHHM, CNFM, CHFM, CNVM, and CVVM indicate types. Refer to page B-10 for details.
4. Lubrication method is different for each model. Refer to "Lubrication" section in page F-4~F-5 for details.
5. "6" at the end of "input capacity symbol" indicates models with 6P motor. Other models come with 4P motor.

Selection Tables Gearmotors

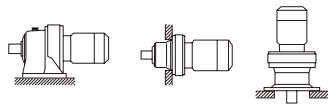

30 kW

n_1: Motor Speed

Hz	50Hz		60Hz	
P	4	6	4	6
n_1 r/min	1450	980	1750	1165

50Hz						60Hz						Nomenclature				Page of Dimension Sheet		
Output Speed n_2 [r/min]	Output Torque Tout [N·m]	[kgf·m]	Allowable Radial Load Pro [N]	[kgf]	SF	Output Speed n_2 [r/min]	Output Torque Tout [N·m]	[kgf·m]	Allowable Radial Load Pro [N]	[kgf]	SF	Input Capacity Symbol	– Frame Size	– Reduction Ratio		CNHM CHHM	CNFM CHFM	CNVM CVVM
242	1130	115	**11300**	**1150**	**1.00**	292	933	95.1	**10700**	**1090**	**1.00**	**40**	**- 6175**	**- 6**		**B-103**	**B-119**	**B-138**
181	1500	153	**12400**	**1260**	**1.00**	219	1240	127	**11700**	**1200**	**1.00**	**40**	**- 6175**	**- 8**		**B-103**	**B-119**	**B-138**
			14100	**1440**	**1.00**				**13400**	**1370**	**1.00**	**40**	**- 6175**	**- 11**		**B-103**	**B-119**	**B-138**
			19200	1960	1.17				18200	1850	1.17	40	- 6180	- 11		B-104	B-120	B-139
			19200	1960	1.30				18200	1850	1.30	40	- 6185	- 11		B-104	B-120	B-139
132	2060	210	27100	2760	1.37	159	1710	174	25500	2600	1.37	40	- 6190	- 11		B-104	B-120	B-139
			27100	2760	1.60				25500	2600	1.60	40	- 6195	- 11		B-104	B-120	B-139
			52200	5320	1.99				49400	5030	1.99	40	- 6205	- 11		B-105	B-121	B-140
			52900	5390	2.51				50000	5100	2.51	40	- 6215	- 11		B-105	B-121	B-140
			14600	**1490**	**1.00**				**13900**	**1420**	**1.00**	**40**	**- 6175**	**- 13**		**B-103**	**B-119**	**B-138**
			19900	2030	1.17				18800	1920	1.17	40	- 6180	- 13		B-104	B-120	B-139
112	2440	249	19900	2030	1.30	135	2020	206	18800	1920	1.30	40	- 6185	- 13		B-104	B-120	B-139
			28200	2870	1.37				26500	2710	1.37	40	- 6190	- 13		B-104	B-120	B-139
			28200	2870	1.60				26500	2710	1.60	40	- 6195	- 13		B-104	B-120	B-139
			15100	**1540**	**1.00**				**14400**	**1470**	**1.00**	**40**	**- 6175**	**- 15**		**B-103**	**B-119**	**B-138**
			20900	2130	1.08				19800	2020	1.08	40	- 6180	- 15		B-104	B-120	B-139
			20900	2130	1.30				19800	2020	1.30	40	- 6185	- 15		B-104	B-120	B-139
96.7	2820	287	29500	3010	1.37	117	2330	238	27800	2840	1.37	40	- 6190	- 15		B-104	B-120	B-139
			29500	3010	1.60				27800	2840	1.60	40	- 6195	- 15		B-104	B-120	B-139
			56000	5710	1.99				53000	5410	1.99	40	- 6205	- 15		B-105	B-121	B-140
			56800	5790	2.51				53800	5480	2.51	40	- 6215	- 15		B-105	B-121	B-140
			15700	1600	0.80				14900	1520	0.80	40	- 6175	- 17		B-103	B-119	B-138
			22000	**2240**	**1.02**				**20800**	**2120**	**1.02**	**40**	**- 6180**	**- 17**		**B-104**	**B-120**	**B-139**
85.3	3190	325	22000	2240	1.27	103	2640	270	20800	2120	1.30	40	- 6185	- 17		B-104	B-120	B-139
			31100	3170	1.37				29300	2990	1.37	40	- 6190	- 17		B-104	B-120	B-139
			31100	3170	1.60				29300	2990	1.60	40	- 6195	- 17		B-104	B-120	B-139
			23600	**2410**	**1.00**				**22400**	**2280**	**1.00**	**40**	**- 6180**	**- 21**		**B-104**	**B-120**	**B-139**
			23600	2410	1.27				22400	2280	1.30	40	- 6185	- 21		B-104	B-120	B-139
			33500	3410	1.37				31500	3220	1.37	40	- 6190	- 21		B-104	B-120	B-139
69.0	3940	402	33500	3410	1.60	83.3	3270	333	31500	3220	1.60	40	- 6195	- 21		B-104	B-120	B-139
			62700	6390	1.97				59300	6050	1.97	40	- 6205	- 21		B-105	B-121	B-140
			64100	6530	2.51				60700	6180	2.51	40	- 6215	- 21		B-105	B-121	B-140
			24400	**2490**	**1.00**				**23100**	**2360**	**1.00**	**40**	**- 6185**	**- 25**		**B-104**	**B-120**	**B-139**
58.0	4690	478	34900	3560	1.17	70.0	3890	396	32900	3360	1.17	40	- 6190	- 25		B-104	B-120	B-139
			34900	3560	1.35				32900	3360	1.35	40	- 6195	- 25		B-104	B-120	B-139
			25300	2580	0.80				24000	2450	0.80	40	- 6185	- 29		B-104	B-120	B-139
			36600	**3730**	**1.02**				**34500**	**3520**	**1.02**	**40**	**- 6190**	**- 29**		**B-104**	**B-120**	**B-139**
			36600	3730	1.26				34500	3520	1.26	40	- 6195	- 29		B-104	B-120	B-139
50.0	5440	555	68200	6950	1.52	60.3	4510	460	64600	6590	1.52	40	- 6205	- 29		B-105	B-121	B-140
			69600	7090	1.95				65900	6720	1.95	40	- 6215	- 29		B-105	B-121	B-140
			73700	7520	2.51				69800	7120	2.51	40	- 6225	- 29		B-106	B-122	B-141
			37700	**3850**	**1.09**				**35800**	**3650**	**1.30**	**406**	**- 6190**	**- 21**		**B-104**	**B-120**	**B-139**
46.7	5830	595	37700	3850	1.36	55.5	4910	500	35800	3650	1.60	406	- 6195	- 21		B-104	B-120	B-139
			71700	7310	2.14				68200	6960	2.51	406	- 6215	- 21		B-105	B-121	B-140
41.4	6570	670	**38400**	**3920**	**1.00**	50.0	5440	555	**36300**	**3700**	**1.00**	**40**	**- 6195**	**- 35**		**B-104**	**B-120**	**B-139**
			76300	7770	1.15				72600	7400	1.32	406	- 6205	- 29		B-105	B-121	B-140
33.8	8050	821	77800	7930	1.57	40.2	6780	691	74100	7550	1.87	406	- 6215	- 29		B-105	B-121	B-140
			82500	8410	1.87				78500	8000	2.22	406	- 6225	- 29		B-106	B-122	B-141
			41100	4190	0.90				38900	3970	1.00	40	- 6195	- 43		B-104	B-120	B-139
			76600	**7810**	**1.06**				**72600**	**7400**	**1.06**	**40**	**- 6205**	**- 43**		**B-105**	**B-121**	**B-140**
33.7	8070	823	78200	7970	1.51	40.7	6690	682	74100	7560	1.51	40	- 6215	- 43		B-105	B-121	B-140
			83000	8460	1.88				78600	8010	1.88	40	- 6225	- 43		B-106	B-122	B-141
24.6	11100	1130	**84600**	**8620**	**1.13**	29.7	9180	935	**80300**	**8180**	**1.26**	**40**	**- 6215**	**- 59**		**B-105**	**B-121**	**B-140**
			89800	9150	1.31				85200	8680	1.51	40	- 6225	- 59		B-106	B-122	B-141
			87200	**8890**	**1.06**				**83100**	**8480**	**1.26**	**406**	**- 6215**	**- 43**		**B-105**	**B-121**	**B-140**
22.8	11900	1220	92600	9440	1.34	27.1	10000	1020	88300	9000	1.59	406	- 6225	- 43		B-106	B-122	B-141
			129000	13200	2.16				123000	12500	2.51	406	- 6245	- 43		B-107	B-123	B-142

6. "☆" indicates models manufactured with reducer and motor separately mounted on a common baseplate (horizontal shaft direction) or on an adaptor (vertical shaft direction). Consult us for details, including dimensions.
7. Allowable radial load (Pro) is the value at the midpoint of the slow speed shaft.
8. "(K)" indicates models with reduction ratios equal to nominal ratio. Refer to Table A-3 "6000SK Series (Actual Reduction Ratio)" on page A-4 for actual reduction ratio. Indicated reduction ratio is the same as actual reduction ratio for other models.
9. Maintain torque load during operation within "Output torque" in the table for models with "*" in the SF column. They cannot be operated with 100% motor rating.

Selection Tables Gearmotors

n_1: Motor Speed

30 kW	Hz	50Hz		60Hz	
	P	4	6	4	6
	n_1 r/min	1450	980	1750	1165

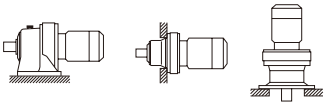

CHHM/CNHM CHFM/CNFM CVVM/CNVM

50Hz						60Hz						Nomenclature				Page of Dimension Sheet		
Output Speed n_2 [r/min]	Output Torque Tout [N·m]	[kgf·m]	Allowable Radial Load Pro [N]	[kgf]	SF	Output Speed n_2 [r/min]	Output Torque Tout [N·m]	[kgf·m]	Allowable Radial Load Pro [N]	[kgf]	SF	Input Capacity Symbol	– Frame Size	– Reduction Ratio		CNHM CHHM	CNFM CHFM	CNVM CVVM
			125000	**12800**	**1.15**				**119000**	**12200**	**1.26**	**406 -**	**6235**	**- 59**		**B-106**	**B-122**	**B-141**
16.6	16400	1670	140000	14300	1.57	19.7	13800	1410	134000	13600	1.87	406 -	6245	- 59		B-107	B-123	B-142
			173000	17600	1.89				164000	16800	2.16	406 -	6255	- 59		B-107	B-123	B-142
	13500	1370	113000	11500	*		13500	1370	106000	10800	*	40 -	6225DB	- 121		B-113	B-130	B-149
			140000	14300	0.87				133000	13500	1.05	40 -	6235DB	- 121		B-114	B-131	B-150
12.0	21500	2190	156000	15900	0.95	14.5	17800	1820	148000	15100	1.15	40 -	6245DB	- 121		B-114	B-131	B-150
			192000	**19600**	**1.01**				**182000**	**18600**	**1.01**	**40 -**	**6255DA**	**- 121**		**B-115**	**B-132**	**B-151**
			192000	19600	1.28				182000	18600	1.54	40 -	6255DB	- 121		B-115	B-132	B-151
			236000	24000	1.46				223000	22700	1.61	40 -	6265DA	- 121		B-115	B-132	B-151
11.3	24200	2460	193000	19700	1.28	13.4	20300	2070	184000	18800	1.43	406 -	6255	- 87		B-107	B-123	B-142
			236000	24100	1.78				225000	22900	1.78	406 -	6265	- 87		B-107	B-123	B-142
	19600	2000	151000	15400	*		19600	2000	143000	14500	*	40 -	6235DB	- 165		B-114	B-131	B-150
			167000	17000	0.89				159000	16200	1.08	40 -	6245DB	- 165		B-114	B-131	B-150
8.79	29300	2990	**206000**	**21000**	**1.01**	10.6	24300	2480	**195000**	**19900**	**1.01**	**40 -**	**6255DA**	**- 165**		**B-115**	**B-132**	**B-151**
			206000	21000	1.06				195000	19900	1.28	40 -	6255DB	- 165		B-115	B-132	B-151
			252000	25700	1.49				239000	24300	1.61	40 -	6265DA	- 165		B-115	B-132	B-151
	26200	2680	177000	18000	*		26200	2680	167000	17000	*	40 -	6245DB	- 195		B-114	B-131	B-150
7.44			216000	22000	0.90	8.97			205000	20900	1.01	40 -	6255DA	- 195		B-115	B-132	B-151
	34700	3530	216000	22000	0.90		28700	2930	205000	20900	1.08	40 -	6255DB	- 195		B-115	B-132	B-151
			265000	27000	1.26				251000	25600	1.52	40 -	6265DA	- 195		B-115	B-132	B-151
	25800	2630	189000	19300	*		25800	2630	179000	18200	*	40 -	6245DB	- 231		B-114	B-131	B-150
6.28	31000	3160	231000	23500	*	7.58	31000	3160	218000	22200	*	40 -	6255DA	- 231		B-115	B-132	B-151
	41100	4190	276000	28100	1.12		34000	3470	267000	27200	1.35	40 -	6265DA	- 231		B-115	B-132	B-151
5.31	31000	3160	243000	24700	*	6.41	31000	3160	229000	23400	*	40 -	6255DA	- 273		B-115	B-132	B-151
	48500	4950	276000	28100	0.95		40200	4100	276000	28100	1.14	40 -	6265DA	- 273		B-115	B-132	B-151
	46000	4690	276000	28100	*		46000	4690	276000	28100	*	40 -	6265DA	- 319		B-115	B-132	B-151
4.55	56700	5780	276000	28100	0.81	5.49	47000	4790	276000	28100	0.98	40 -	6265DA	- 319		B-115	B-132	B-151
			248000	25300	1.20				248000	25300	1.45	40 -	6275DA	- 319		B-115	-	B-151
3.85	46000	4690	276000	28100	*	4.64	46000	4690	276000	28100	*	40 -	6265DA	- 377		B-115	B-132	B-151
	67000	6830	**248000**	**25300**	**1.02**		55500	5660	**248000**	**25300**	**1.23**	**40 -**	**6275DA**	**- 377**		**B-115**	**-**	**B-151**
3.07	68200	6950	248000	25300	*	3.70	68200	6950	248000	25300	*	40 -	6275DA	- 473		B-115	-	B-151
	84100	8570	248000	25300	0.81		69700	7100	248000	25300	0.98	40 -	6275DA	- 473		B-115	-	B-151
2.59	68200	6950	248000	25300	*	3.13	68200	6950	248000	25300	*	40 -	6275DA	- 559		B-115	-	B-151

1. Combinations in **bold** are the recommended models for operations for 10 hours/day with uniform load (service factor is about 1.0 for motor rating at 50Hz).
2. Motor slippage may affect n_1 and n_2. Refer to technical data for details.
3. CNHM, CHHM, CNFM, CHFM, CNVM, and CVVM indicate types. Refer to page B-10 for details.
4. Lubrication method is different for each model. Refer to "Lubrication" section in page F-4~F-5 for details.
5. "6" at the end of "input capacity symbol" indicates models with 6P motor. Other models come with 4P motor.

Selection Tables Gearmotors

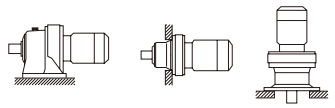

n_1: Motor Speed

37 kW	Hz	50Hz		60Hz	
	P	4	6	4	6
	n_1 r/min	1450	980	1750	1165

50Hz						60Hz						Nomenclature				Page of Dimension Sheet		
Output Speed n_2 [r/min]	Output Torque Tout [N·m]	[kgf·m]	Allowable Radial Load Pro [N]	[kgf]	SF	Output Speed n_2 [r/min]	Output Torque Tout [N·m]	[kgf·m]	Allowable Radial Load Pro [N]	[kgf]	SF	Input Capacity Symbol	–	Frame Size	– Reduction Ratio	CNHM CHHM	CNFM CHFM	CNVM CVVM
			19000	**1940**	**1.05**				**18000**	**1830**	**1.05**	**50**	**-**	**6185**	**- 11**	**B-104**	**B-120**	**B-139**
			27000	2750	1.11				25400	2590	1.11	50	-	6190	- 11	B-104	B-120	B-139
132	2550	260	27000	2750	1.30	159	2110	215	25400	2590	1.30	50	-	6195	- 11	B-104	B-120	B-139
			52000	5310	1.61				49300	5020	1.61	50	-	6205	- 11	B-105	B-121	B-140
			52700	5380	2.04				49900	5090	2.04	50	-	6215	- 11	B-105	B-121	B-140
			56000	5700	2.69				53000	5400	2.69	50	-	6225	- 11	B-106	B-122	B-141
			19700	**2010**	**1.05**				**18600**	**1900**	**1.05**	**50**	**-**	**6185**	**- 13**	**B-104**	**B-120**	**B-139**
112	3010	307	28000	2850	1.11	135	2490	254	26400	2690	1.11	50	-	6190	- 13	B-104	B-120	B-139
			28000	2850	1.30				26400	2690	1.30	50	-	6195	- 13	B-104	B-120	B-139
			20600	**2100**	**1.05**				**19500**	**1990**	**1.05**	**50**	**-**	**6185**	**- 15**	**B-104**	**B-120**	**B-139**
			29300	2990	1.11				27700	2820	1.11	50	-	6190	- 15	B-104	B-120	B-139
96.7	3470	354	29300	2990	1.30	117	2880	293	27700	2820	1.30	50	-	6195	- 15	B-104	B-120	B-139
			55900	5700	1.61				52900	5390	1.61	50	-	6205	- 15	B-105	B-121	B-140
			56600	5770	2.04				53600	5470	2.04	50	-	6215	- 15	B-105	B-121	B-140
			60400	6160	2.69				57200	5830	2.69	50	-	6225	- 15	B-106	B-122	B-141
			21600	**2210**	**1.03**				**20500**	**2090**	**1.05**	**50**	**-**	**6185**	**- 17**	**B-104**	**B-120**	**B-139**
85.3	3940	401	30900	3150	1.11	103	3260	332	29100	2970	1.11	50	-	6190	- 17	B-104	B-120	B-139
			30900	3150	1.30				29100	2970	1.30	50	-	6195	- 17	B-104	B-120	B-139
			23300	**2370**	**1.03**				**22100**	**2250**	**1.05**	**50**	**-**	**6185**	**- 21**	**B-104**	**B-120**	**B-139**
			33200	3380	1.11				31300	3190	1.11	50	-	6190	- 21	B-104	B-120	B-139
69.0	4860	496	33200	3380	1.30	83.3	4030	411	31300	3190	1.30	50	-	6195	- 21	B-104	B-120	B-139
			62500	6370	1.60				59200	6030	1.60	50	-	6205	- 21	B-105	B-121	B-140
			63800	6510	2.04				60500	6170	2.04	50	-	6215	- 21	B-105	B-121	B-140
			67500	6880	2.55				63900	6510	2.55	50	-	6225	- 21	B-106	B-122	B-141
			32900	**3360**	**1.11**				**31300**	**3190**	**1.11**	**506**	**-**	**6190**	**- 15**	**B-104**	**B-120**	**B-139**
65.3	5140	524	32900	3360	1.30	77.7	4320	441	31300	3190	1.30	506	-	6195	- 15	B-104	B-120	B-139
			62600	6380	1.61				59500	6070	1.61	506	-	6205	- 15	B-105	B-121	B-140
			63400	6460	2.04				60300	6150	2.04	506	-	6215	- 15	B-105	B-121	B-140
			23900	2440	0.81				22700	2320	0.81	50	-	6185	- 25	B-104	B-120	B-139
58.0	5790	590	34600	3530	0.95	70.0	4800	489	32700	3330	0.95	50	-	6190	- 25	B-104	B-120	B-139
			34600	**3530**	**1.09**				**32700**	**3330**	**1.09**	**50**	**-**	**6195**	**- 25**	**B-104**	**B-120**	**B-139**
			36200	**3690**	**1.02**				**34200**	**3490**	**1.02**	**50**	**-**	**6195**	**- 29**	**B-104**	**B-120**	**B-139**
50.0	6710	684	67900	6920	1.24	60.3	5560	567	64400	6560	1.24	50	-	6205	- 29	B-105	B-121	B-140
			69300	7060	1.58				65700	6700	1.58	50	-	6215	- 29	B-105	B-121	B-140
			73400	7490	2.04				69600	7090	2.04	50	-	6225	- 29	B-106	B-122	B-141
			37300	**3800**	**1.11**				**35500**	**3610**	**1.30**	**506**	**-**	**6195**	**- 21**	**B-104**	**B-120**	**B-139**
46.7	7190	733	71400	7280	1.74	55.5	6050	617	68000	6930	2.04	506	-	6215	- 21	B-105	B-121	B-140
			75500	7690	2.06				71800	7320	2.45	506	-	6225	- 21	B-106	B-122	B-141
41.4	8100	826	38000	3870	0.81	50.0	6710	684	35900	3660	0.81	50	-	6195	- 35	B-104	B-120	B-139
			77300	7880	1.27				73700	7510	1.51	506	-	6215	- 29	B-105	B-121	B-140
33.8	9930	1010	82000	8360	1.51	40.2	8360	852	78100	7970	1.80	506	-	6225	- 29	B-106	B-122	B-141
			103000	10500	1.90				97900	9980	2.04	506	-	6235	- 29	B-106	B-122	B-141
33.7	9950	1010	**77700**	**7920**	**1.22**	40.7	8250	841	**73800**	**7520**	**1.22**	**50**	**-**	**6215**	**- 43**	**B-105**	**B-121**	**B-140**
			82500	8410	1.53				78300	7980	1.53	50	-	6225	- 43	B-106	B-122	B-141
24.6	13700	1390	**89200**	**9090**	**1.06**	29.7	11300	1150	**84700**	**8630**	**1.22**	**50**	**-**	**6225**	**- 59**	**B-106**	**B-122**	**B-141**
22.8	14700	1500	129000	13100	1.75	27.1	12400	1260	122000	12500	2.04	506	-	6245	- 43	B-107	B-123	B-142
			140000	14200	1.28				133000	13500	1.52	506	-	6245	- 59	B-107	B-123	B-142
16.6	20200	2060	172000	17600	1.54	19.7	17000	1730	164000	16700	1.75	506	-	6255	- 59	B-107	B-123	B-142
			211000	21500	2.28				201000	20500	2.55	506	-	6265	- 59	B-107	B-123	B-142

6. "☆" indicates models manufactured with reducer and motor separately mounted on a common baseplate (horizontal shaft direction) or on an adaptor (vertical shaft direction). Consult us for details, including dimensions.
7. Allowable radial load (Pro) is the value at the midpoint of the slow speed shaft.
8. "(K)" indicates models with reduction ratios equal to nominal ratio. Refer to Table A-3 "6000SK Series (Actual Reduction Ratio)" on page A-4 for actual reduction ratio. Indicated reduction ratio is the same as actual reduction ratio for other models.
9. Maintain torque load during operation within "Output torque" in the table for models with "*" in the SF column. They cannot be operated with 100% motor rating.

Selection Tables Gearmotors

n_1: Motor Speed

37 kW	Hz	50Hz		60Hz	
	P	4	6	4	6
	n_1 r/min	1450	980	1750	1165

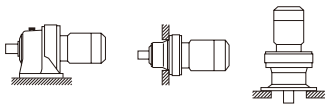

50Hz						60Hz						Nomenclature				Page of Dimension Sheet		
Output Speed n_2 [r/min]	Output Torque Tout [N·m]	[kgf·m]	Allowable Radial Load Pro [N]	[kgf]	SF	Output Speed n_2 [r/min]	Output Torque Tout [N·m]	[kgf·m]	Allowable Radial Load Pro [N]	[kgf]	SF	Input Capacity Symbol	–	Frame Size	– Reduction Ratio	CNHM CHHM	CNFM CHFM	CNVM CVVM
12.0	18700	1910	141000	14300	*	14.5	18700	1910	133000	13500	*	50	-	6235DB	- 121	B-114	B-131	B-150
	20500	2090	156000	15900	*		20500	2090	148000	15000	*	50	-	6245DB	- 121	B-114	B-131	B-150
	26500	2710	**191000**	**19500**	**1.04**		22000	2240	**181000**	**18500**	**1.25**	**50**	**-**	**6255DB**	**- 121**	**B-115**	**B-132**	**B-151**
			235000	23900	1.18				222000	22700	1.37	50	-	6265DA	- 121	B-115	B-132	B-151
11.3	29800	3040	**192000**	**19600**	**1.04**	13.4	25100	2560	**183000**	**18700**	**1.16**	**506**	**-**	**6255**	**- 87**	**B-107**	**B-123**	**B-142**
			236000	24000	1.44				224000	22900	1.44	506	-	6265	- 87	B-107	B-123	B-142
8.79	26200	2680	168000	17100	*	10.6	26200	2680	158000	16100	*	50	-	6245DB	- 165	B-114	B-131	B-150
	36200	3690	205000	20900	0.86		30000	3060	194000	19800	1.04	50	-	6255DB	- 165	B-115	B-132	B-151
			251000	25600	1.21				238000	24300	1.30	50	-	6265DA	- 165	B-115	B-132	B-151
7.44	31200	3180	216000	22100	*	8.97	31200	3180	204000	20800	*	50	-	6255DB	- 195	B-115	B-132	B-151
	42800	4360	**263000**	**26800**	**1.02**		**35400**	**3610**	**250000**	**25400**	**1.23**	**50**	**-**	**6265DA**	**- 195**	**B-115**	**B-132**	**B-151**
6.28	50700	5160	276000	28100	0.91	7.58	42000	4280	266000	27100	1.10	50	-	6265DA	- 231	B-115	B-132	B-151
5.31	46000	4690	276000	28100	*	6.41	46000	4690	276000	28100	*	50	-	6265DA	- 273	B-115	B-132	B-151
4.55	70000	7130	248000	25300	0.97	5.49	58000	5910	248000	25300	1.18	50	-	6275DA	- 319	B-115	-	B-151
3.85	68200	6950	248000	25300	*	4.64	68200	6950	248000	25300	*	50	-	6275DA	- 377	B-115	-	B-151
	82700	8430	248000	25300	0.82		68500	6980	248000	25300	1.00	50	-	6275DA	- 377	B-115	-	B-151

n_1: Motor Speed

45 kW	Hz	50Hz		60Hz	
	P	4	6	4	6
	n_1 r/min	1450	980	1750	1165

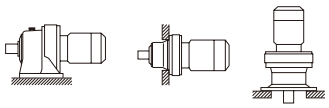

50Hz						60Hz						Nomenclature				Page of Dimension Sheet		
Output Speed n_2 [r/min]	Output Torque Tout [N·m]	[kgf·m]	Allowable Radial Load Pro [N]	[kgf]	SF	Output Speed n_2 [r/min]	Output Torque Tout [N·m]	[kgf·m]	Allowable Radial Load Pro [N]	[kgf]	SF	Input Capacity Symbol	–	Frame Size	– Reduction Ratio	CNHM CHHM	CNFM CHFM	CNVM CVVM
132	3100	316	**26800**	**2730**	**1.07**	159	2570	262	**25300**	**2570**	**1.07**	**60**	**-**	**6195**	**- 11**	**B-104**	**B-120**	**B-139**
			51900	5290	1.33				49200	5010	1.33	60	-	6205	- 11	B-105	B-121	B-140
			52600	5360	1.67				49800	5080	1.67	60	-	6215	- 11	B-105	B-121	B-140
			55800	5690	2.21				52800	5390	2.21	60	-	6225	- 11	B-106	B-122	B-141
112	3660	373	**27700**	**2830**	**1.07**	135	3030	309	**26200**	**2670**	**1.07**	**60**	**-**	**6195**	**- 13**	**B-104**	**B-120**	**B-139**
96.7	4220	431	**29000**	**2960**	**1.07**	117	3500	357	**27400**	**2800**	**1.07**	**60**	**-**	**6195**	**- 15**	**B-104**	**B-120**	**B-139**
			55700	5680	1.33				52800	5380	1.33	60	-	6205	- 15	B-105	B-121	B-140
			56500	5750	1.67				53500	5450	1.67	60	-	6215	- 15	B-105	B-121	B-140
			60200	6140	2.21				57000	5820	2.21	60	-	6225	- 15	B-106	B-122	B-141
85.3	4790	488	21200	2160	0.85	103	3970	404	20200	2060	0.87	60	-	6185	- 17	B-104	B-120	B-139
			30600	**3120**	**1.07**				**28900**	**2950**	**1.07**	**60**	**-**	**6195**	**- 17**	**B-104**	**B-120**	**B-139**
69.0	5910	603	22800	2330	0.85	83.3	4900	499	21700	2210	0.87	60	-	6185	- 21	B-104	B-120	B-139
			32900	3350	0.91				31100	3170	0.91	60	-	6190	- 21	B-104	B-120	B-139
			32900	**3350**	**1.07**				**31100**	**3170**	**1.07**	**60**	**-**	**6195**	**- 21**	**B-104**	**B-120**	**B-139**
			62200	6340	1.32				59000	6010	1.32	60	-	6205	- 21	B-105	B-121	B-140
			63600	6480	1.67				60300	6140	1.67	60	-	6215	- 21	B-105	B-121	B-140
			67200	6850	2.09				63700	6490	2.09	60	-	6225	- 21	B-106	B-122	B-141
65.3	6250	637	62300	6350	1.33	77.7	5260	536	59300	6050	1.33	606	-	6205	- 15	B-105	B-121	B-140
			63100	6430	1.67				60100	6130	1.67	606	-	6215	- 15	B-105	B-121	B-140
			67400	6870	2.21				64200	6540	2.21	606	-	6225	- 15	B-106	B-122	B-141
58.0	7040	718	34200	3490	0.90	70.0	5830	595	32400	3300	0.90	60	-	6195	- 25	B-104	B-120	B-139
50.0	8170	832	35700	3640	0.84	60.3	6770	690	33900	3450	0.84	60	-	6195	- 29	B-104	B-120	B-139
			67600	**6890**	**1.02**				**64100**	**6530**	**1.02**	**60**	**-**	**6205**	**- 29**	**B-105**	**B-121**	**B-140**
			68900	7030	1.30				65400	6660	1.30	60	-	6215	- 29	B-105	B-121	B-140
			73100	7450	1.67				69300	7070	1.67	60	-	6225	- 29	B-106	B-122	B-141

1. Combinations in **bold** are the recommended models for operations for 10 hours/day with uniform load (service factor is about 1.0 for motor rating at 50Hz).
2. Motor slippage may affect n_1 and n_2. Refer to technical data for details.
3. CNHM, CHHM, CNFM, CHFM, CNVM, and CVVM indicate types. Refer to page B-10 for details.
4. Lubrication method is different for each model. Refer to "Lubrication" section in page F-4~F-5 for details.
5. "6" at the end of "input capacity symbol" indicates models with 6P motor. Other models come with 4P motor.

Selection Tables Gearmotors

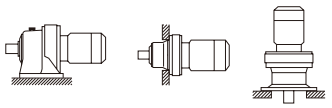

n_1: Motor Speed

45 kW	Hz	50Hz		60Hz	
	P	4	6	4	6
	n_1 r/min	1450	980	1750	1165

50Hz						60Hz						Nomenclature				Page of Dimension Sheet		
Output Speed n_2 [r/min]	Output Torque Tout [N·m]	[kgf·m]	Allowable Radial Load Pro [N]	[kgf]	SF	Output Speed n_2 [r/min]	Output Torque Tout [N·m]	[kgf·m]	Allowable Radial Load Pro [N]	[kgf]	SF	Input Capacity Symbol	– Frame Size	– Reduction Ratio		CNHM CHHM	CNFM CHFM	CVVM
			69500	**7080**	**1.06**				**66200**	**6750**	**1.22**	**606 -**	**6205**	**- 21**		**B-105**	**B-121**	**B-140**
46.7	8750	892	71000	7240	1.43	55.5	7360	750	67700	6900	1.67	606 -	6215	- 21		B-105	B-121	B-140
			75100	7660	1.69				71500	7290	2.01	606 -	6225	- 21		B-106	B-122	B-141
			94100	9590	2.16				89500	9130	2.17	606 -	6235	- 21		B-106	B-122	B-141
			76800	**7830**	**1.05**				**73200**	**7460**	**1.24**	**606 -**	**6215**	**- 29**		**B-105**	**B-121**	**B-140**
33.8	12100	1230	102000	10400	1.56	40.2	10200	1040	97500	9940	1.67	606 -	6235	- 29		B-106	B-122	B-141
			114000	11700	2.09				109000	11100	2.09	606 -	6245	- 29		B-107	B-123	B-142
33.7	12100	1230	**77200**	**7870**	**1.00**	40.7	10000	1020	**73300**	**7470**	**1.00**	**60 -**	**6215**	**- 43**		**B-105**	**B-121**	**B-140**
			82000	8360	1.26				77800	7940	1.26	60 -	6225	- 43		B-106	B-122	B-141
			114000	**11600**	**1.06**				**108000**	**11100**	**1.21**	**606 -**	**6235**	**- 43**		**B-106**	**B-122**	**B-141**
22.8	17900	1830	128000	13100	1.44	27.1	15100	1540	122000	12400	1.67	606 -	6245	- 43		B-107	B-123	B-142
			157000	16000	1.73				150000	15300	1.98	606 -	6255	- 43		B-107	B-123	B-142
			193000	19700	2.51				184000	18700	2.51	606 -	6265	- 43		B-107	B-123	B-142
16.6	24600	2510	**139000**	**14100**	**1.05**	19.7	20700	2110	**132000**	**13500**	**1.25**	**606 -**	**6245**	**- 59**		**B-107**	**B-123**	**B-142**
			210000	21400	1.87				200000	20400	2.09	606 -	6265	- 59		B-107	B-123	B-142
12.0	32300	3290	190000	19400	0.85	14.5	26700	2730	180000	18400	1.03	60 -	6255DB	- 121		B-115	B-132	B-151
			234000	23800	0.97				222000	22600	1.07	60 -	6265DA	- 121		B-115	B-132	B-151
11.3	36200	3690	**235000**	**23900**	**1.19**	13.4	30500	3110	**223000**	**22800**	**1.19**	**606 -**	**6265**	**- 87**		**B-107**	**B-123**	**B-142**
8.79	44000	4490	250000	25500	0.98	10.6	36500	3720	237000	24200	1.13	60 -	6265DA	- 165		B-115	B-132	B-151
7.44	52000	5300	262000	26700	0.84	8.97	43100	4390	248000	25300	1.01	60 -	6265DA	- 195		B-115	B-132	B-151
6.28	46000	4690	276000	28100	*	7.58	46000	4690	265000	27000	*	60 -	6265DA	- 231		B-115	B-132	B-151
4.55	68200	6950	248000	25300	*	5.49	68200	6950	248000	25300	*	60 -	6275DA	- 319		B-115	-	B-151
	85100	8670	248000	25300	0.80		70500	7190	248000	25300	0.97	60 -	6275DA	- 319		B-115	-	B-151

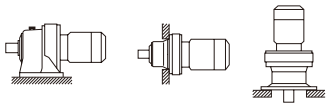

n_1: Motor Speed

55 kW	Hz	50Hz		60Hz	
	P	4	6	4	6
	n_1 r/min	1450	980	1750	1165

50Hz						60Hz						Nomenclature				Page of Dimension Sheet		
Output Speed n_2 [r/min]	Output Torque Tout [N·m]	[kgf·m]	Allowable Radial Load Pro [N]	[kgf]	SF	Output Speed n_2 [r/min]	Output Torque Tout [N·m]	[kgf·m]	Allowable Radial Load Pro [N]	[kgf]	SF	Input Capacity Symbol	– Frame Size	– Reduction Ratio		CNHM CHHM	CNFM CHFM	CVVM
			51700	**5270**	**1.09**				**49000**	**5000**	**1.09**	**75 -**	**6205**	**- 11**		**B-105**	**B-121**	**B-140**
132	3790	386	52400	5340	1.37	159	3140	320	49700	5060	1.37	75 -	6215	- 11		B-105	B-121	B-140
			55600	5670	1.81				52700	5370	1.81	75 -	6225	- 11		B-106	B-122	B-141
			55500	**5660**	**1.09**				**52600**	**5360**	**1.09**	**75 -**	**6205**	**- 15**		**B-105**	**B-121**	**B-140**
96.7	5160	526	56200	5730	1.37	117	4280	436	53300	5430	1.37	75 -	6215	- 15		B-105	B-121	B-140
			60000	6120	1.81				56900	5800	1.81	75 -	6225	- 15		B-106	B-122	B-141
			57800	**5900**	**1.09**				**55100**	**5610**	**1.09**	**756 -**	**6205**	**- 11**	☆	**-**	**-**	**-**
89.1	5600	571	58600	5970	1.37	106	4710	480	55800	5690	1.37	756 -	6215	- 11	☆	-	-	-
			62200	6340	1.81				59300	6040	1.81	756 -	6225	- 11	☆	-	-	-
			61900	**6310**	**1.08**				**58700**	**5980**	**1.08**	**75 -**	**6205**	**- 21**		**B-105**	**B-121**	**B-140**
69.0	7230	737	63300	6450	1.37	83.3	5990	610	60000	6120	1.37	75 -	6215	- 21		B-105	B-121	B-140
			66900	6820	1.71				63400	6470	1.71	75 -	6225	- 21		B-106	B-122	B-141
			62000	**6320**	**1.09**				**59000**	**6020**	**1.09**	**756 -**	**6205**	**- 15**	☆	**-**	**-**	**-**
65.3	7640	779	62800	6400	1.37	77.7	6420	655	59800	6100	1.37	756 -	6215	- 15	☆	-	-	-
			67100	6840	1.81				63900	6510	1.81	756 -	6225	- 15	☆	-	-	-

6. "☆" indicates models manufactured with reducer and motor separately mounted on a common baseplate (horizontal shaft direction) or on an adaptor (vertical shaft direction). Consult us for details, including dimensions.
7. Allowable radial load (Pro) is the value at the midpoint of the slow speed shaft.
8. "(K)" indicates models with reduction ratios equal to nominal ratio. Refer to Table A-3 "6000SK Series (Actual Reduction Ratio)" on page A-4 for actual reduction ratio. Indicated reduction ratio is the same as actual reduction ratio for other models.
9. Maintain torque load during operation within "Output torque" in the table for models with "*" in the SF column. They cannot be operated with 100% motor rating.

Selection Tables Gearmotors

55 kW

n_1: Motor Speed

Hz	50Hz		60Hz	
P	4	6	4	6
n_1 r/min	1450	980	1750	1165

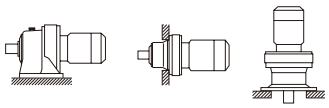

CHHM/CNHM CHFM/CNFM CVVM/CNVM

50Hz						60Hz						Nomenclature				Page of Dimension Sheet		
Output Speed n_2 [r/min]	Output Torque Tout [N·m]	[kgf·m]	Allowable Radial Load Pro [N]	[kgf]	SF	Output Speed n_2 [r/min]	Output Torque Tout [N·m]	[kgf·m]	Allowable Radial Load Pro [N]	[kgf]	SF	Input Capacity Symbol	Frame Size	Reduction Ratio		CNHM CHHM	CNFM CHFM	CNVM CVVM
50.0	9980	1020	**68500**	**6980**	**1.06**	60.3	8270	843	**65000**	**6630**	**1.06**	**75 -**	**6215**	**- 29**		**B-105**	**B-121**	**B-140**
			72700	7410	1.37				69000	7030	1.37	75 -	6225	- 29		B-106	B-122	B-141
46.7	10700	1090	70500	7190	1.17	55.5	8990	917	67200	6860	1.37	756 -	6215	- 21	☆	-	-	-
			74700	7610	1.38				71200	7250	1.65	756 -	6225	- 21	☆	-	-	-
			93700	9550	1.77				89200	9090	1.77	756 -	6235	- 21		B-106	B-122	B-141
33.8	14800	1510	**80900**	**8240**	**1.02**	40.2	12400	1270	**77200**	**7870**	**1.21**	**756 -**	**6225**	**- 29**	☆	**-**	**-**	**-**
			114000	11600	1.71				108000	11100	1.71	756 -	6245	- 29		B-107	B-123	B-142
			141000	14300	2.15				134000	13600	2.15	756 -	6255	- 29		B-107	B-123	B-142
33.7	14800	1510	**81400**	**8290**	**1.03**	40.7	12300	1250	**77300**	**7880**	**1.03**	**75 -**	**6225**	**- 43**		**B-106**	**B-122**	**B-141**
22.8	21900	2230	127000	13000	1.18	27.1	18400	1880	121000	12400	1.37	756 -	6245	- 43		B-107	B-123	B-142
			157000	16000	1.42				149000	15200	1.62	756 -	6255	- 43		B-107	B-123	B-142
			192000	19600	2.05				183000	18700	2.05	756 -	6265	- 43		B-107	B-123	B-142
16.6	30000	3060	**170000**	**17400**	**1.03**	19.7	25300	2580	**162000**	**16500**	**1.18**	**756 -**	**6255**	**- 59**		**B-107**	**B-123**	**B-142**
			209000	21400	1.53				199000	20300	1.71	756 -	6265	- 59		B-107	B-123	B-142
			248000	25300	2.27				248000	25300	2.40	756 -	6275	- 59	☆	-	-	-

75 kW

n_1: Motor Speed

Hz	50Hz		60Hz	
P	4	6	4	6
n_1 r/min	1450	980	1750	1165

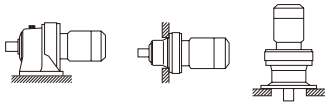

CHHM/CNHM CHFM/CNFM CVVM/CNVM

50Hz						60Hz						Nomenclature				Page of Dimension Sheet		
Output Speed n_2 [r/min]	Output Torque Tout [N·m]	[kgf·m]	Allowable Radial Load Pro [N]	[kgf]	SF	Output Speed n_2 [r/min]	Output Torque Tout [N·m]	[kgf·m]	Allowable Radial Load Pro [N]	[kgf]	SF	Input Capacity Symbol	Frame Size	Reduction Ratio		CNHM CHHM	CNFM CHFM	CNVM CVVM
132	5160	526	55300	5640	1.33	159	4280	436	52400	5340	1.33	100 -	6225	- 11	☆	-	-	-
96.7	7040	718	59600	6070	1.33	117	5830	595	56500	5760	1.33	100 -	6225	- 15	☆	-	-	-
89.1	7640	779	77600	7910	1.51	106	6420	655	73900	7530	1.51	1006 -	6235	- 11	☆	-	-	-
			86500	8810	1.76				82300	8390	1.76	1006 -	6245	- 11	☆	-	-	-
69.0	9850	1000	**66300**	**6760**	**1.26**	83.3	8170	832	**62900**	**6420**	**1.26**	**100 -**	**6225**	**- 21**	☆	**-**	**-**	**-**
65.3	10400	1060	82900	8450	1.51	77.7	8760	893	78900	8050	1.51	1006 -	6235	- 15	☆	-	-	-
			92800	9460	1.76				88300	9000	1.76	1006 -	6245	- 15	☆	-	-	-
50.0	13600	1390	**71800**	**7320**	**1.00**	60.3	11300	1150	**68200**	**6960**	**1.00**	**100 -**	**6225**	**- 29**	☆	**-**	**-**	**-**
46.7	14600	1490	**92800**	**9460**	**1.30**	55.5	12300	1250	**88500**	**9020**	**1.30**	**1006 -**	**6235**	**- 21**	☆	**-**	**-**	**-**
			104000	10600	1.60				98700	10100	1.60	1006 -	6245	- 21	☆	-	-	-
			127000	12900	2.01				121000	12300	2.01	1006 -	6255	- 21	☆	-	-	-
33.8	20100	2050	**113000**	**11500**	**1.26**	40.2	16900	1730	**108000**	**11000**	**1.26**	**1006 -**	**6245**	**- 29**	☆	**-**	**-**	**-**
			139000	14200	1.57				133000	13500	1.57	1006 -	6255	- 29	☆	-	-	-
			172000	17500	2.12				163000	16600	2.12	1006 -	6265	- 29	☆	-	-	-
22.8	29900	3040	**155000**	**15800**	**1.04**	27.1	25100	2560	**148000**	**15100**	**1.19**	**1006 -**	**6255**	**- 43**	☆	**-**	**-**	**-**
			191000	19500	1.51				182000	18600	1.51	1006 -	6265	- 43	☆	-	-	-
			248000	25300	2.01				248000	25300	2.01	1006 -	6275	- 43	☆	-	-	-
16.6	41000	4180	**208000**	**21200**	**1.12**	19.7	34500	3510	**198000**	**20200**	**1.26**	**1006 -**	**6265**	**- 59**	☆	**-**	**-**	**-**
			248000	25300	1.67				248000	25300	1.76	1006 -	6275	- 59	☆	-	-	-

1. Combinations in **bold** are the recommended models for operations for 10 hours/day with uniform load (service factor is about 1.0 for motor rating at 50Hz).
2. Motor slippage may affect n_1 and n_2. Refer to technical data for details.
3. CNHM, CHHM, CNFM, CHFM, CNVM, and CVVM indicate types. Refer to page B-10 for details.
4. Lubrication method is different for each model. Refer to "Lubrication" section in page F-4~F-5 for details.
5. "6" at the end of "input capacity symbol" indicates models with 6P motor. Other models come with 4P motor.

Selection Tables Gearmotors

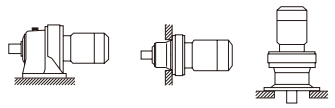

n_1: Motor Speed

90 kW	Hz	50Hz		60Hz	
	P	4	6	4	6
	n_1 r/min	1450	980	1750	1165

50Hz						60Hz						Nomenclature						Page of Dimension Sheet		
Output Speed n_2 [r/min]	Output Torque Tout [N·m]	[kgf·m]	Allowable Radial Load Pro [N]	[kgf]	SF	Output Speed n_2 [r/min]	Output Torque Tout [N·m]	[kgf·m]	Allowable Radial Load Pro [N]	[kgf]	SF	Input Capacity Symbol	–	Frame Size	–	Reduction Ratio		CNHM CHHM	CNFM CHFM	CNVM CVVM
89.1	9170	934	**77300**	**7880**	**1.26**	106	7710	786	**73600**	**7500**	**1.26**	**1256**	**-**	**6235**	**-**	**11**	☆	-	-	-
			86100	8780	1.47				82000	8360	1.47	1256	-	6245	-	11	☆	-	-	-
			106000	10800	1.68				101000	10300	1.68	1256	-	6255	-	11	☆	-	-	-
			130000	13200	1.94				123000	12600	1.94	1256	-	6265	-	11	☆	-	-	-
65.3	12500	1270	**82400**	**8400**	**1.26**	77.7	10500	1070	**78500**	**8010**	**1.26**	**1256**	**-**	**6235**	**-**	**15**	☆	-	-	-
			92300	9410	1.47				87900	8960	1.47	1256	-	6245	-	15	☆	-	-	-
			113000	11600	1.68				108000	11000	1.68	1256	-	6255	-	15	☆	-	-	-
			139000	14100	1.94				132000	13400	1.94	1256	-	6265	-	15	☆	-	-	-
46.7	17500	1780	**92200**	**9400**	**1.08**	55.5	14700	1500	**88000**	**8970**	**1.08**	**1256**	**-**	**6235**	**-**	**21**	☆	-	-	-
			103000	10500	1.33				98200	10000	1.33	1256	-	6245	-	21	☆	-	-	-
			126000	12900	1.68				120000	12300	1.68	1256	-	6255	-	21	☆	-	-	-
			155000	15800	1.91				147000	15000	1.91	1256	-	6265	-	21	☆	-	-	-
33.8	24200	2460	**112000**	**11400**	**1.05**	40.2	20300	2070	**107000**	**10900**	**1.05**	**1256**	**-**	**6245**	**-**	**29**	☆	-	-	-
			139000	14100	1.31				132000	13500	1.31	1256	-	6255	-	29	☆	-	-	-
			171000	17400	1.77				163000	16600	1.77	1256	-	6265	-	29	☆	-	-	-
22.8	35800	3650	**190000**	**19400**	**1.26**	27.1	30100	3070	**181000**	**18500**	**1.26**	**1256**	**-**	**6265**	**-**	**43**	☆	-	-	-
			248000	25300	1.68				248000	25300	1.68	1256	-	6275	-	43	☆	-	-	-
16.6	49200	5010	248000	25300	1.39	19.7	41400	4220	248000	25300	1.47	1256	-	6275	-	59	☆	-	-	-

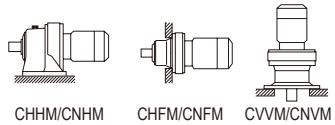

n_1: Motor Speed

110 kW	Hz	50Hz		60Hz	
	P	4	6	4	6
	n_1 r/min	1450	980	1750	1165

50Hz						60Hz						Nomenclature						Page of Dimension Sheet		
Output Speed n_2 [r/min]	Output Torque Tout [N·m]	[kgf·m]	Allowable Radial Load Pro [N]	[kgf]	SF	Output Speed n_2 [r/min]	Output Torque Tout [N·m]	[kgf·m]	Allowable Radial Load Pro [N]	[kgf]	SF	Input Capacity Symbol	–	Frame Size	–	Reduction Ratio		CNHM CHHM	CNFM CHFM	CNVM CVVM
89.1	11200	1140	**85700**	**8730**	**1.20**	106	9420	961	**81600**	**8320**	**1.20**	**1506**	**-**	**6245**	**-**	**11**	☆	-	-	-
			105000	10700	1.37				100000	10200	1.37	1506	-	6255	-	11	☆	-	-	-
65.3	15300	1560	**91700**	**9350**	**1.20**	77.7	12800	1310	**87500**	**8910**	**1.20**	**1506**	**-**	**6245**	**-**	**15**	☆	-	-	-
			113000	11500	1.37				108000	11000	1.37	1506	-	6255	-	15	☆	-	-	-
46.7	21400	2180	**102000**	**10400**	**1.09**	55.5	18000	1830	**97500**	**9940**	**1.09**	**1506**	**-**	**6245**	**-**	**21**	☆	-	-	-
			126000	12800	1.37				120000	12200	1.37	1506	-	6255	-	21	☆	-	-	-
33.8	29500	3010	**138000**	**14000**	**1.07**	40.2	24800	2530	**131000**	**13400**	**1.07**	**1506**	**-**	**6255**	**-**	**29**	☆	-	-	-
			170000	17300	1.45				162000	16500	1.45	1506	-	6265	-	29	☆	-	-	-
22.8	43800	4460	**189000**	**19300**	**1.03**	27.1	36800	3750	**180000**	**18400**	**1.03**	**1506**	**-**	**6265**	**-**	**43**	☆	-	-	-

6. "☆" indicates models manufactured with reducer and motor separately mounted on a common baseplate (horizontal shaft direction) or on an adaptor (vertical shaft direction). Consult us for details, including dimensions.
7. Allowable radial load (Pro) is the value at the midpoint of the slow speed shaft.
8. "(K)" indicates models with reduction ratios equal to nominal ratio. Refer to Table A-3 "6000SK Series (Actual Reduction Ratio)" on page A-4 for actual reduction ratio. Indicated reduction ratio is the same as actual reduction ratio for other models.
9. Maintain torque load during operation within "Output torque" in the table for models with "*" in the SF column. They cannot be operated with 100% motor rating.

Selection Tables Gearmotors

n_1: Motor Speed

132 kW	Hz	50Hz		60Hz	
	P	4	6	4	6
	n_1 r/min	1450	980	1750	1165

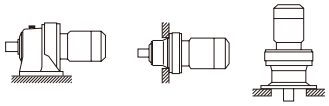

CHHM/CNHM CHFM/CNFM CVVM/CNVM

50Hz						60Hz						Nomenclature					Page of Dimension Sheet		
Output Speed n_2 [r/min]	Output Torque Tout [N·m]	[kgf·m]	Allowable Radial Load Pro [N]	[kgf]	SF	Output Speed n_2 [r/min]	Output Torque Tout [N·m]	[kgf·m]	Allowable Radial Load Pro [N]	[kgf]	SF	Input Capacity Symbol	– Frame Size	– Reduction Ratio			CNHM CHHM	CNFM CHFM	CNVM CVVM
89.1	13400	1370	**105000**	**10700**	**1.14**	106	11300	1150	**99900**	**10200**	**1.14**	**1756 -**	**6255**	**- 11**	☆		**-**	**-**	**-**
			129000	13100	1.33				123000	12500	1.33	1756 -	6265	- 11	☆		-	-	-
65.3	18300	1870	**112000**	**11500**	**1.14**	77.7	15400	1570	**107000**	**10900**	**1.14**	**1756 -**	**6255**	**- 15**	☆		**-**	**-**	**-**
			138000	14000	1.33				131000	13400	1.33	1756 -	6265	- 15	☆		-	-	-
46.7	25700	2620	**125000**	**12700**	**1.14**	55.5	21600	2200	**119000**	**12100**	**1.14**	**1756 -**	**6255**	**- 21**	☆		**-**	**-**	**-**
			154000	15700	1.30				146000	14900	1.30	1756 -	6265	- 21	☆		-	-	-
33.8	35400	3610	**169000**	**17200**	**1.20**	40.2	29800	3040	**161000**	**16400**	**1.20**	**1756 -**	**6265**	**- 29**	☆		**-**	**-**	**-**

1. Combinations in **bold** are the recommended models for operations for 10 hours/day with uniform load (service factor is about 1.0 for motor rating at 50Hz).
2. Motor slippage may affect n_1 and n_2. Refer to technical data for details.
3. CNHM, CHHM, CNFM, CHFM, CNVM, and CVVM indicate types. Refer to page B-10 for details.
4. Lubrication method is different for each model. Refer to "Lubrication" section in page F-4~F-5 for details.
5. "6" at the end of "input capacity symbol" indicates models with 6P motor. Other models come with 4P motor.
6. "☆" indicate models manufactured with reducer and motor separately mounted on a common baseplate (horizontal shaft direction) or on an adaptor (vertical shaft direction). Consult us for details, including dimensions.
7. Allowable radial load (Pro) is the value at the midpoint of the slow speed shaft.
8. "(K)" indicate models with reduction ratios equal to nominal ratio. Refer to Table A-3 "6000SK Series (Actual Reduction Ratio)" on page A-4 for actual reduction ratio. Indicated reduction ratio is the same as actual reduction ratio for other models.
9. Maintain torque load during operation within "Output torque" in the table for models with "*" in the SF column. They cannot be operated with 100% motor rating.

M E M O

M E M O

B CYCLO® GEARMOTORS

3. Dimension Tables

Dimension Tables Gearmotors (Universal direction, Foot-Mount)

CHHM□ - 607□SK to 609□SK

Note: 1

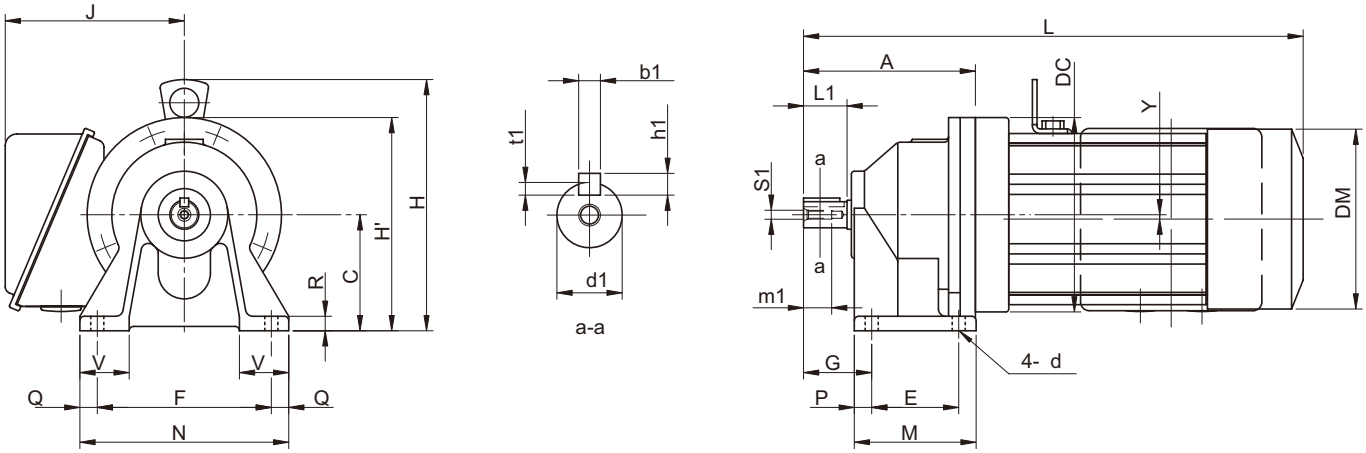

Frame size Note: 4	A	C	DC	E	F	G	M	N	P	Q	R	V	Y	d	Output Shaft Note: 2, 3, 6						
															d1	L1	b1	h1	t1	S1	m1
607□SK	119	80	134	60	120	47	84	144	12	12	10	34	0	9	18	30	6	6	3.5	M6	16
608□SK	140	90	150	75	120	52	99	144	12	12	13	37	0	9	22	35	6	6	3.5	M6	16
609□SK	166	100	150	90	150	60	135	180	15	15	12	40	0	11	28	35	8	7	4	M8	20

Model Note: 4, 5	Motor		Standard						With Brake					
	[kW]	[P]	L	H	H'	J	DM	W [kg]	L	H	H'	J	DM	W [kg]
CHHM05 - 607□SK - (B) - Ratio	0.4	4	310	-	147	113	124	10	342	-	147	113	124	11
CHHM08 - 607□SK - (B) - Ratio	0.55	4	351	193	-	143	160	13	394	193	-	143	160	15
CHHM1 - 607□SK - (B) - Ratio	0.75	4	351	193	-	143	160	13	394	193	-	143	160	15
CHHM05 - 608□SK - (B) - Ratio	0.4	4	336	-	165	113	124	11	368	-	165	113	124	12
CHHM08 - 608□SK - (B) - Ratio	0.55	4	377	203	-	143	160	14	420	203	-	143	160	16
CHHM1 - 608□SK - (B) - Ratio	0.75	4	377	203	-	143	160	14	420	203	-	143	160	16
CHHM1H - 608□SK - (B) - Ratio	1.1	4	410	210	-	148	169	19	472	210	-	148	169	23
CHHM2 - 608□SK - (B) - Ratio	1.5	4	410	210	-	148	169	19	472	210	-	148	169	23
CHHM05 - 609□SK - (B) - Ratio	0.4	4	362	207	-	113	124	13	349	207	-	113	124	14
CHHM08 - 609□SK - (B) - Ratio	0.55	4	403	213	-	143	160	16	446	213	-	143	160	18
CHHM1 - 609□SK - (B) - Ratio	0.75	4	403	213	-	143	160	16	446	213	-	143	160	18
CHHM1H - 609□SK - (B) - Ratio	1.1	4	436	220	-	148	169	21	498	220	-	148	169	25
CHHM2 - 609□SK - (B) - Ratio	1.5	4	436	220	-	148	169	21	498	220	-	148	169	25
CHHM3 - 609□SK - (B) - Ratio	2.2	4	456	226	-	155	182	25	519	226	-	155	182	31

Note: 1. □ indicates motor capacity.
2. Dimension of shaft end diameter: Dimension tolerance conforms to JIS B 0401-1976 "h6."
3. Dimension of shaft end key: Dimension tolerance conforms to JIS B 1301-1996 "Parallel Key."

Dimension Tables Gearmotors (Universal direction, Foot-Mount)

CHHM□ Note: 1 - 610□SK to 611□SK

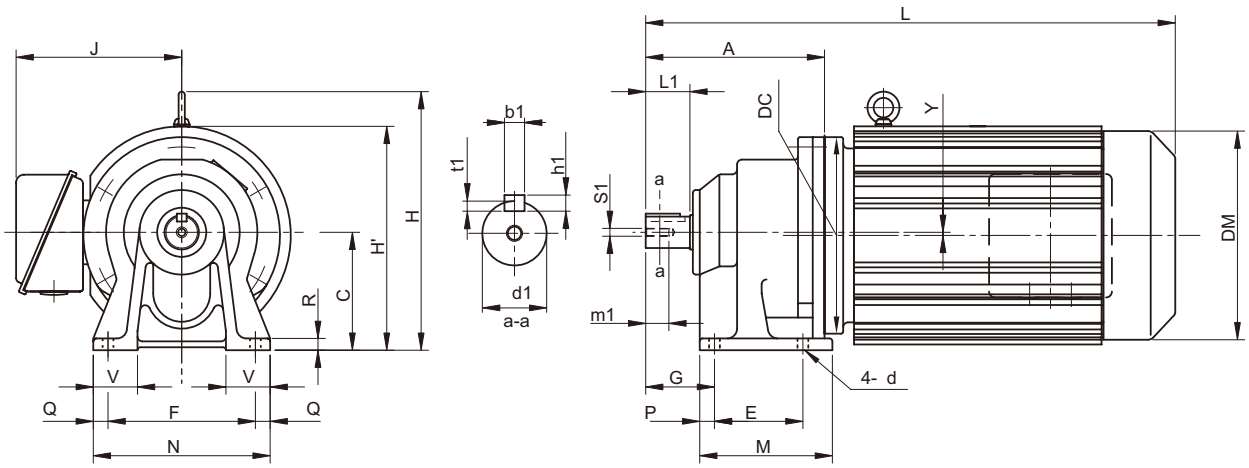

Frame size Note: 4	A	C	DC	E	F	G	M	N	P	Q	R	V	Y	d	Output Shaft Note: 2, 3, 6						
															d1	L1	b1	h1	t1	S1	m1
610□SK	170	100	162	90	150	60	135	180	15	15	12	40	0	11	28	35	8	7	4	M8	20
611□SK	182	120	204	90	150	70	135	180	15	15	12	45	3	11	32	45	10	8	5	M8	20

Model Note: 4, 5	Motor		Standard						With Brake					
	[kW]	[P]	L	H	H'	J	DM	W [kg]	L	H	H'	J	DM	W [kg]
CHHM05 - 610□SK - (B) - Ratio	0.4	4	362	216	-	113	124	14	393	216	-	113	124	15
CHHM08 - 610□SK - (B) - Ratio	0.55	4	403	216	-	143	160	17	452	216	-	143	160	19
CHHM1 - 610□SK - (B) - Ratio	0.75	4	403	216	-	143	160	17	452	216	-	143	160	19
CHHM1H - 610□SK - (B) - Ratio	1.1	4	436	220	-	148	169	22	493	220	-	148	169	26
CHHM2 - 610□SK - (B) - Ratio	1.5	4	436	220	-	148	169	22	493	220	-	148	169	26
CHHM3 - 610□SK - (B) - Ratio	2.2	4	456	226	-	155	182	26	519	226	-	155	182	32
CHHM4 - 610□SK - (B) - Ratio	3.0	4	491	246	-	166	222	38	563	246	-	166	222	49
CHHM5 - 610□SK - (B) - Ratio	3.7	4	491	246	-	166	222	38	563	246	-	166	222	49
CHHM08 - 611□SK - (B) - Ratio	0.55	4	419	230	-	143	160	29	462	230	-	143	160	31
CHHM1 - 611□SK - (B) - Ratio	0.75	4	419	230	-	143	160	29	462	230	-	143	160	31
CHHM1H - 611□SK - (B) - Ratio	1.1	4	452	237	-	148	169	34	514	237	-	148	169	38
CHHM2 - 611□SK - (B) - Ratio	1.5	4	452	237	-	148	169	34	514	237	-	148	169	38
CHHM3 - 611□SK - (B) - Ratio	2.2	4	472	243	-	155	182	38	535	243	-	155	182	44
CHHM4 - 611□SK - (B) - Ratio	3.0	4	495	263	-	166	222	50	567	263	-	166	222	61
CHHM5 - 611□SK - (B) - Ratio	3.7	4	495	263	-	166	222	50	567	263	-	166	222	61
CHHM8 - 611□SK - (B) - Ratio	5.5	4	539	263	-	166	222	58	611	263	-	166	222	69

Note: 4. □ indicates 0 or 5, expressing combination with reduction ratio. Refer to the Selection Table for details.
5. "B" after the frame size indicates models equipped with brake.
6. Dimension of shaft end: Refer to pages F-28 to F-29 for details.
7. Dimensions in above drawings are subject to change without notice.

Dimension Tables Gearmotors (Universal Direction, Foot-Mount)

CNHM[Note: 1]- 606□ to 609□

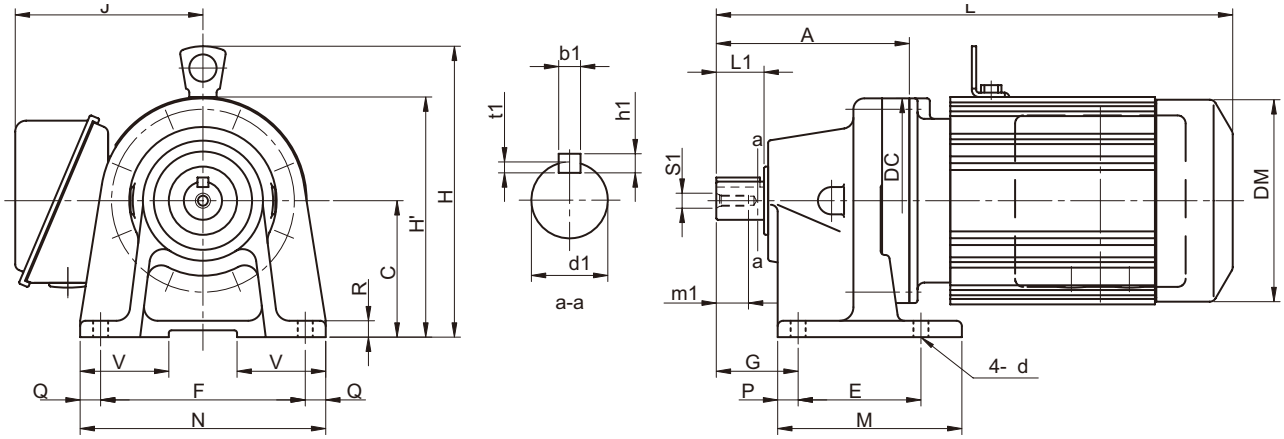

Frame size Note: 4	A	C	DC	E	F	G	M	N	P	Q	R	V	d	Output Shaft Note: 2, 3, 6						
														d1	L1	b1	h1	t1	S1	m1
606□	92	80	110	60	120	41	84	144	12	12	10	48	9	14	25	5	5	3	M5	16
607□	98	80	110	60	120	47	84	144	12	12	10	48	9	18	30	6	6	3.5	M6	16
608□	129	90	134	75	120	52	99	144	12	12	13	49	9	22	35	6	6	3.5	M6	16
609□	142	100	150	90	150	60	135	180	15	15	12	65	11	28	35	8	7	4	M8	20

Model Note: 4, 5	Motor		Standard						With Brake					
	[kW]	[P]	L	H	H'	J	DM	W [kg]	L	H	H'	J	DM	W [kg]
CNHM01 - 606□ - (B) - Ratio	0.1	4	254	-	140	113	119	7	261	-	138	113	124	8
CNHM02 - 606□ - (B) - Ratio	0.2	4	272	-	138	113	124	8	300	-	138	113	124	9
CNHM03 - 606□ - (B) - Ratio	0.25	4	272	-	138	113	124	8	300	-	138	113	124	9
CNHM01 - 607□ - (B) - Ratio	0.1	4	260	-	140	113	119	7	267	-	138	113	124	8
CNHM02 - 607□ - (B) - Ratio	0.2	4	278	-	138	113	124	8	306	-	138	113	124	9
CNHM03 - 607□ - (B) - Ratio	0.25	4	278	-	138	113	124	8	306	-	138	113	124	9
CNHM05 - 607□ - (B) - Ratio	0.4	4	294	-	138	113	124	9	326	-	138	113	124	10
CNHM01 - 608□ - (B) - Ratio	0.1	4	286	-	157	113	119	10	293	-	157	113	124	11
CNHM02 - 608□ - (B) - Ratio	0.2	4	304	-	157	113	124	11	332	-	157	113	124	12
CNHM03 - 608□ - (B) - Ratio	0.25	4	304	-	157	113	124	11	332	-	157	113	124	12
CNHM05 - 608□ - (B) - Ratio	0.4	4	320	-	157	113	124	13	352	-	157	113	124	14
CNHM08 - 608□ - (B) - Ratio	0.55	4	361	203	-	143	160	17	404	203	-	143	160	18
CNHM1 - 608□ - (B) - Ratio	0.75	4	361	203	-	143	160	17	404	203	-	143	160	18
CNHM01 - 609□ - (B) - Ratio	0.1	4	304	-	175	113	119	12	311	-	175	113	124	14
CNHM02 - 609□ - (B) - Ratio	0.2	4	322	-	175	113	124	13	350	-	175	113	124	15
CNHM03 - 609□ - (B) - Ratio	0.25	4	322	-	175	113	124	13	350	-	175	113	124	15
CNHM05 - 609□ - (B) - Ratio	0.4	4	338	-	175	113	124	14	370	-	175	113	124	16
CNHM08 - 609□ - (B) - Ratio	0.55	4	379	213	-	143	160	18	422	213	-	143	160	21
CNHM1 - 609□ - (B) - Ratio	0.75	4	379	213	-	143	160	18	422	213	-	143	160	21
CNHM1H - 609□ - (B) - Ratio	1.1	4	412	220	-	148	169	21	474	220	-	148	169	26
CNHM2 - 609□ - (B) - Ratio	1.5	4	412	220	-	148	169	21	474	220	-	148	169	26

Note: 1. ⬚ indicates motor capacity.
2. Dimension of shaft end diameter: Dimension tolerance conforms to JIS B 0401-1976 "h6."
3. Dimension of shaft end key: Dimension tolerance conforms to JIS B 1301-1996 "Parallel Key."

Dimension Tables Gearmotors (Universal Direction, Foot-Mount)

CNHM□ (Note: 1) - 610□ to 612□

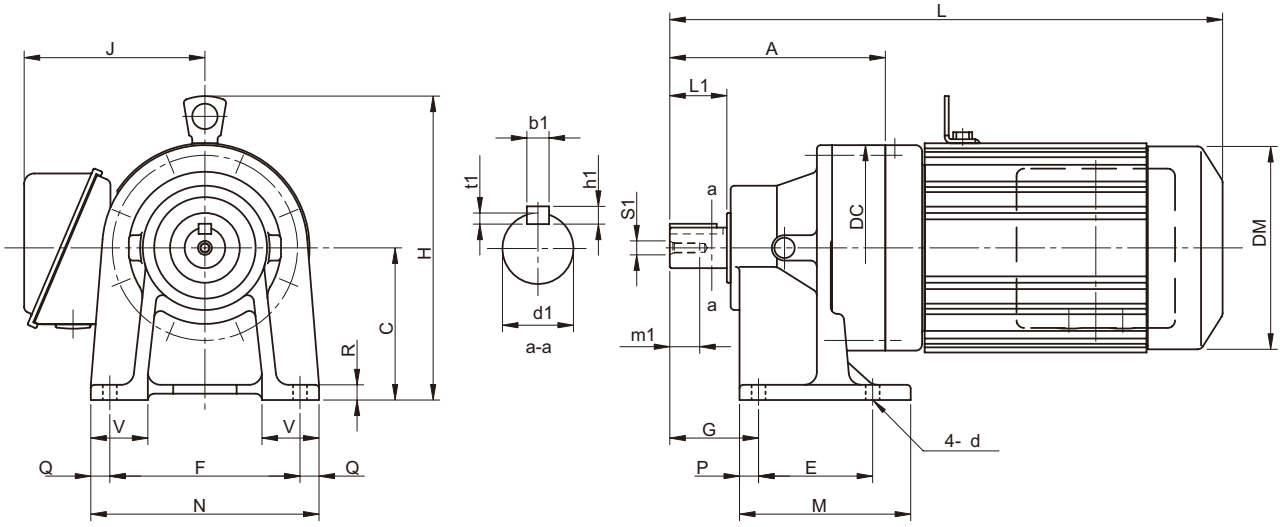

Frame size (Note: 4)	A	C	DC	E	F	G	M	N	P	Q	R	V	d	Output Shaft (Note: 2, 3, 6) d1	L1	b1	h1	t1	S1	m1
610□	156	100	150	90	150	60	135	180	15	15	12	40	11	28	35	8	7	4	M8	20
611□	170	120	162	90	150	70	135	180	15	15	12	45	11	32	45	10	8	5	M8	20
612□	186	120	204	115	190	82	155	230	20	20	15	55	14	38	55	10	8	5	M8	20

Model (Note: 4, 5)	Motor [kW]	Motor [P]	Standard L	Standard H	Standard J	Standard DM	Standard W [kg]	With Brake L	With Brake H	With Brake J	With Brake DM	With Brake W [kg]
CNHM02 - 610□ - (B) - Ratio	0.2	4	336	207	113	124	18	364	207	113	124	20
CNHM03 - 610□ - (B) - Ratio	0.25	4	336	207	113	124	18	364	207	113	124	20
CNHM05 - 610□ - (B) - Ratio	0.4	4	352	207	113	124	19	384	207	113	124	21
CNHM08 - 610□ - (B) - Ratio	0.55	4	393	213	143	160	23	436	213	143	160	26
CNHM1 - 610□ - (B) - Ratio	0.75	4	393	213	143	160	23	436	213	143	160	26
CNHM1H - 610□ - (B) - Ratio	1.1	4	426	220	148	169	27	488	220	148	169	32
CNHM2 - 610□ - (B) - Ratio	1.5	4	426	220	148	169	27	488	220	148	169	32
CNHM3 - 610□ - (B) - Ratio	2.2	4	446	226	155	182	31	509	226	155	182	37
CNHM05 - 611□ - (B) - Ratio	0.4	4	363	236	113	124	20	394	236	113	124	21
CNHM08 - 611□ - (B) - Ratio	0.55	4	403	236	143	160	23	452	236	143	160	26
CNHM1 - 611□ - (B) - Ratio	0.75	4	403	236	143	160	23	452	236	143	160	26
CNHM1H - 611□ - (B) - Ratio	1.1	4	436	240	148	169	26	493	240	148	169	31
CNHM2 - 611□ - (B) - Ratio	1.5	4	436	240	148	169	26	493	240	148	169	31
CNHM3 - 611□ - (B) - Ratio	2.2	4	456	246	155	182	30	519	246	155	182	36
CNHM4 - 611□ - (B) - Ratio	3.0	4	491	266	166	222	40	563	266	166	222	50
CNHM5 - 611□ - (B) - Ratio	3.7	4	491	266	166	222	40	563	266	166	222	50
CNHM05 - 612□ - (B) - Ratio	0.4	4	387	257	113	124	30	419	257	113	124	32
CNHM08 - 612□ - (B) - Ratio	0.55	4	423	233	143	160	32	466	233	143	160	35
CNHM1 - 612□ - (B) - Ratio	0.75	4	423	233	143	160	32	466	233	143	160	35
CNHM1H - 612□ - (B) - Ratio	1.1	4	456	240	148	169	36	518	240	148	169	41
CNHM2 - 612□ - (B) - Ratio	1.5	4	456	240	148	169	36	518	240	148	169	41
CNHM3 - 612□ - (B) - Ratio	2.2	4	476	246	155	182	40	539	246	155	182	47
CNHM4 - 612□ - (B) - Ratio	3.0	4	499	266	166	222	50	571	266	166	222	60
CNHM5 - 612□ - (B) - Ratio	3.7	4	499	266	166	222	50	571	266	166	222	60
CNHM8 - 612□ - (B) - Ratio	5.5	4	543	266	166	222	57	615	266	166	222	67

Note: 4. □ indicates 0 or 5, expressing combination with reduction ratio. Refer to the Selection Table for details.
5. "B" after the frame size indicates models equipped with brake.
6. Dimension of shaft end: Refer to pages F-28 to F-29 for details.
7. Dimensions in above drawings are subject to change without notice.

Dimension Tables Gearmotors (Horizontal Direction, Foot-Mount)

CHHM□ - 613□ to 614□ (Note: 1)

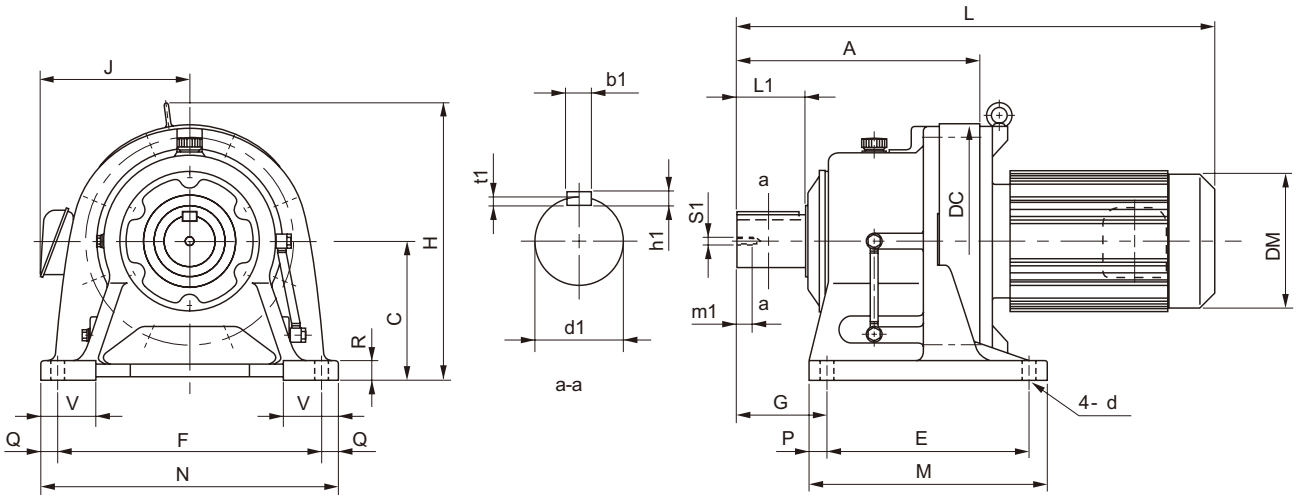

Frame size (Note: 4)	A	C	DC	E	F	G	M	N	P	Q	R	V	d	Output Shaft (Note: 2, 3, 6) d1	L1	b1	h1	t1	S1	m1
613□	240	150	230	145	290	100	195	330	25	20	22	65	18	50	70	14	9	5.5	M10	18
614□	260	150	230	145	290	120	195	330	25	20	22	65	18	50	90	14	9	5.5	M10	18

Model (Note: 4, 5)	Motor [kW]	Motor [P]	Standard L	Standard H	Standard J	Standard DM	Standard W [kg]	With Brake L	With Brake H	With Brake J	With Brake DM	With Brake W [kg]
CHHM08 - 613□ - (B) - Ratio	0.55	4	477	265	143	160	51	520	265	143	160	54
CHHM1 - 613□ - (B) - Ratio	0.75	4	477	265	143	160	51	520	265	143	160	54
CHHM1H - 613□ - (B) - Ratio	1.1	4	510	268	148	169	55	572	268	148	169	60
CHHM2 - 613□ - (B) - Ratio	1.5	4	510	268	148	169	55	572	268	148	169	60
CHHM3 - 613□ - (B) - Ratio	2.2	4	530	274	155	182	58	593	274	155	182	65
CHHM4 - 613□ - (B) - Ratio	3.0	4	553	296	166	222	68	625	296	166	222	78
CHHM5 - 613□ - (B) - Ratio	3.7	4	553	296	166	222	68	625	296	166	222	78
CHHM8 - 613□ - (B) - Ratio	5.5	4	597	296	166	222	75	669	296	166	222	85
CHHM10 - 613□ - (B) - Ratio	7.5	4	620	323	211	251	90	715	323	211	251	108
CHHM15 - 613□ - (B) - Ratio	11	4	680	323	211	251	104	775	323	211	251	121
CHHM1 - 614□ - (B) - Ratio	0.75	4	497	268	143	160	52	540	268	143	160	55
CHHM1H - 614□ - (B) - Ratio	1.1	4	530	268	148	169	56	592	268	148	169	61
CHHM2 - 614□ - (B) - Ratio	1.5	4	530	268	148	169	56	592	268	148	169	61
CHHM3 - 614□ - (B) - Ratio	2.2	4	550	274	155	182	59	613	274	155	182	66
CHHM4 - 614□ - (B) - Ratio	3.0	4	573	296	166	222	69	645	296	166	222	79
CHHM5 - 614□ - (B) - Ratio	3.7	4	573	296	166	222	69	645	296	166	222	79
CHHM8 - 614□ - (B) - Ratio	5.5	4	617	296	166	222	76	689	296	166	222	86
CHHM10 - 614□ - (B) - Ratio	7.5	4	640	323	211	251	91	735	323	211	251	109
CHHM15 - 614□ - (B) - Ratio	11	4	700	323	211	251	104	795	323	211	251	122
CHHM20 - 614□ - (B) - Ratio	15	4	790	358	261	324	156	895	321	261	324	190

Note: 1. ⬚ indicates motor capacity.
2. Dimension of shaft end diameter: Dimension tolerance conforms to JIS B 0401-1976 "h6."
3. Dimension of shaft end key: Dimension tolerance conforms to JIS B 1301-1996 "Parallel Key."

Dimension Tables Gearmotors (Horizontal Direction, Foot-Mount)

CHHM□ (Note: 1) - 616□ to 617□

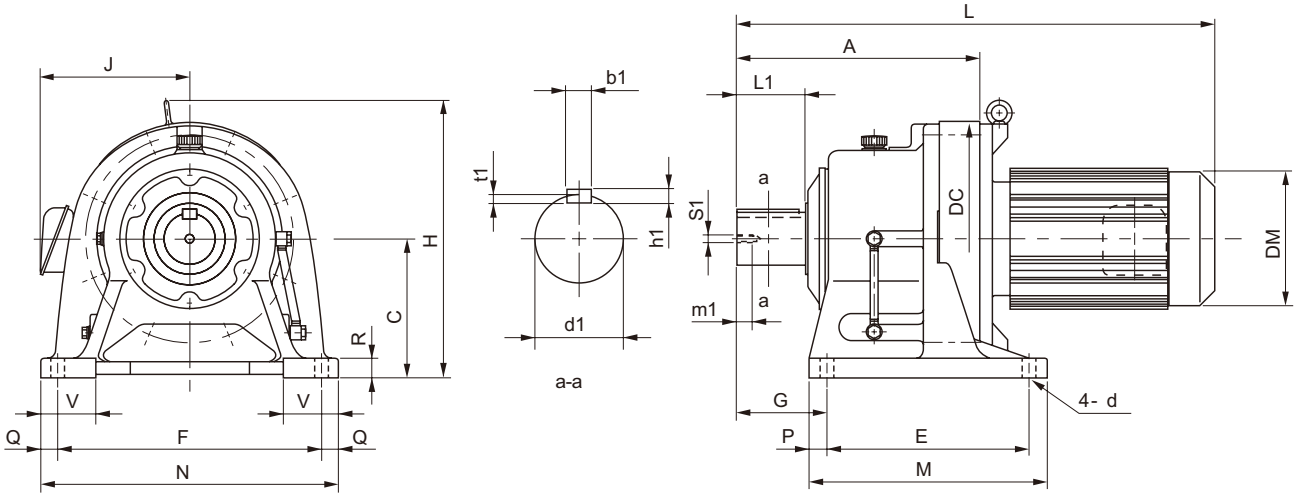

Frame size (Note: 4)	A	C	DC	E	F	G	M	N	P	Q	R	V	d	Output Shaft (Note: 2, 3, 6) d1	L1	b1	h1	t1	S1	m1
616□	308	160	300	150	370	139	238	410	44	20	25	75	18	60	90	18	11	7	M10	18
617□	352	200	340	275	380	125	335	430	30	25	30	80	22	70	90	20	12	7.5	M12	24

Model (Note: 4, 5)	Motor [kW]	Motor [P]	Standard L	Standard H	Standard J	Standard DM	Standard W [kg]	With Brake L	With Brake H	With Brake J	With Brake DM	With Brake W [kg]
CHHM1H - 616□ - (B) - Ratio	1.1	4	583	310	148	169	93	645	310	148	169	99
CHHM2 - 616□ - (B) - Ratio	1.5	4	583	310	148	169	93	645	310	148	169	99
CHHM3 - 616□ - (B) - Ratio	2.2	4	598	310	155	182	96	661	310	155	182	103
CHHM4 - 616□ - (B) - Ratio	3.0	4	621	310	166	222	105	693	310	166	222	116
CHHM5 - 616□ - (B) - Ratio	3.7	4	621	310	166	222	105	693	310	166	222	116
CHHM8 - 616□ - (B) - Ratio	5.5	4	665	310	166	222	112	737	310	166	222	123
CHHM10 - 616□ - (B) - Ratio	7.5	4	693	333	211	251	128	788	333	211	251	146
CHHM15 - 616□ - (B) - Ratio	11	4	753	333	211	251	142	848	333	211	251	160
*CHHM20 - 616□ - (B) - Ratio	15	4	838	368	261	324	195	943	368	261	324	230
*CHHM25 - 616□ - (B) - Ratio	18.5	4	933	368	340	394	267	1098	368	340	394	323
*CHHM30 - 616□ - (B) - Ratio	22	4	933	368	340	394	267	1098	368	340	394	323
CHHM4 - 617□ - (B) - Ratio	3.0	4	680	403	166	222	146	752	403	166	222	157
CHHM5 - 617□ - (B) - Ratio	3.7	4	680	403	166	222	146	752	403	166	222	157
CHHM8 - 617□ - (B) - Ratio	5.5	4	724	403	166	222	153	796	403	166	222	164
CHHM10 - 617□ - (B) - Ratio	7.5	4	742	403	211	251	168	837	403	211	251	187
CHHM15 - 617□ - (B) - Ratio	11	4	802	403	211	251	182	897	403	211	251	201
CHHM20 - 617□ - (B) - Ratio	15	4	882	413	259	324	236	987	413	259	324	271
CHHM25 - 617□ - (B) - Ratio	18.5	4	977	428	340	394	304	1142	428	340	394	360
CHHM30 - 617□ - (B) - Ratio	22	4	977	428	340	394	304	1142	428	340	394	360
CHHM40 - 617□ - (B) - Ratio	30	4	977	428	340	394	321	1142	428	340	394	369

"*" indicates models with bottom level of the motor lower than the reducer base.
Refer to pages B-152 and B-153 for center hight options.

Note: 4. □ indicates 0 or 5, expressing combination with reduction ratio. Refer to the Selection Table for details.
5. "B" after the frame size indicates models equipped with brake.
6. Dimension of shaft end: Refer to pages F-28 to F-29 for details.
7. Dimensions in above drawings are subject to change without notice.

Dimension Tables Gearmotors (Horizontal Direction, Foot-Mount)

CHHM□ - 618□ to 619□ (Note: 1)

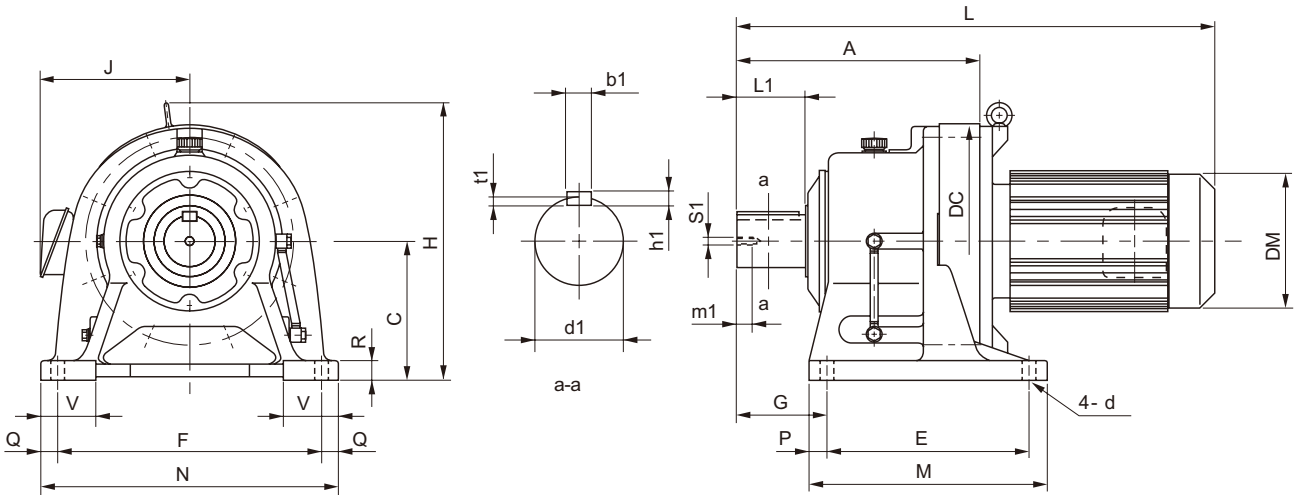

Frame size (Note: 4)	A	C	DC	E	F	G	M	N	P	Q	R	V	d	Output Shaft (Note: 2, 3, 6) d1	L1	b1	h1	t1	S1	m1
618□	389	220	370	320	420	145	380	470	30	25	30	85	22	80	110	22	14	9	M12	24
619□	465	250	430	380	480	170	440	530	30	25	35	90	26	95	135	25	14	9	M20	34

Model (Note: 4, 5)	Motor [kW]	Motor [P]	Standard L	Standard H	Standard J	Standard DM	Standard W [kg]	With Brake L	With Brake H	With Brake J	With Brake DM	With Brake W [kg]
CHHM4 - 618□ - (B) - Ratio	3.0	4	717	438	166	222	184	789	438	166	222	194
CHHM5 - 618□ - (B) - Ratio	3.7	4	717	438	166	222	184	789	438	166	222	194
CHHM8 - 618□ - (B) - Ratio	5.5	4	761	438	166	222	192	833	438	166	222	202
CHHM10 - 618□ - (B) - Ratio	7.5	4	779	438	211	251	207	874	438	211	251	225
CHHM15 - 618□ - (B) - Ratio	11	4	839	438	211	251	221	934	438	211	251	239
CHHM20 - 618□ - (B) - Ratio	15	4	919	438	261	324	281	1024	438	261	324	310
CHHM25 - 618□ - (B) - Ratio	18.5	4	1014	448	340	394	347	1179	448	340	394	398
CHHM30 - 618□ - (B) - Ratio	22	4	1014	448	340	394	347	1179	448	340	394	398
CHHM40 - 618□ - (B) - Ratio	30	4	1014	448	340	394	364	1179	448	340	394	407
CHHM50 - 618□ - (B) - Ratio	37	4	1129	481	340	394	412	1344	481	340	394	509
CHHM60 - 618□ - (B) - Ratio	45	4	1129	481	340	394	412	1344	481	340	394	509
CHHM8 - 619□ - (B) - Ratio	5.5	4	857	511	166	222	266	929	511	166	222	276
CHHM10 - 619□ - (B) - Ratio	7.5	4	870	511	211	251	279	965	511	211	251	297
CHHM15 - 619□ - (B) - Ratio	11	4	930	511	211	251	293	1025	511	211	251	311
CHHM20 - 619□ - (B) - Ratio	15	4	995	467	261	324	346	1100	467	261	324	381
CHHM25 - 619□ - (B) - Ratio	18.5	4	1090	511	340	394	422	1255	511	340	394	467
CHHM256 - 619□ - (B) - Ratio	18.5	6	1090	511	340	394	437	1255	511	340	394	480
CHHM30 - 619□ - (B) - Ratio	22	4	1090	511	340	394	422	1255	511	340	394	467
CHHM40 - 619□ - (B) - Ratio	30	4	1090	511	340	394	437	1255	511	340	394	480
CHHM406 - 619□ - (B) - Ratio	30	6	1205	511	340	394	475	1420	511	340	394	572
CHHM50 - 619□ - (B) - Ratio	37	4	1205	511	340	394	475	1420	511	340	394	572
CHHM506 - 619□ - (B) - Ratio	37	6	1205	511	340	394	475	1420	511	340	394	572
CHHM60 - 619□ - (B) - Ratio	45	4	1205	511	340	394	475	1420	511	340	394	572

Note: 1. ⬚ indicates motor capacity.
2. Dimension of shaft end diameter: Dimension tolerance conforms to JIS B 0401-1976 "h6."
3. Dimension of shaft end key: Dimension tolerance conforms to JIS B 1301-1996 "Parallel Key."

Dimension Tables Gearmotors (Horizontal Direction, Foot-Mount)

CHHM□ - 6205 to 6215 (Note: 1)

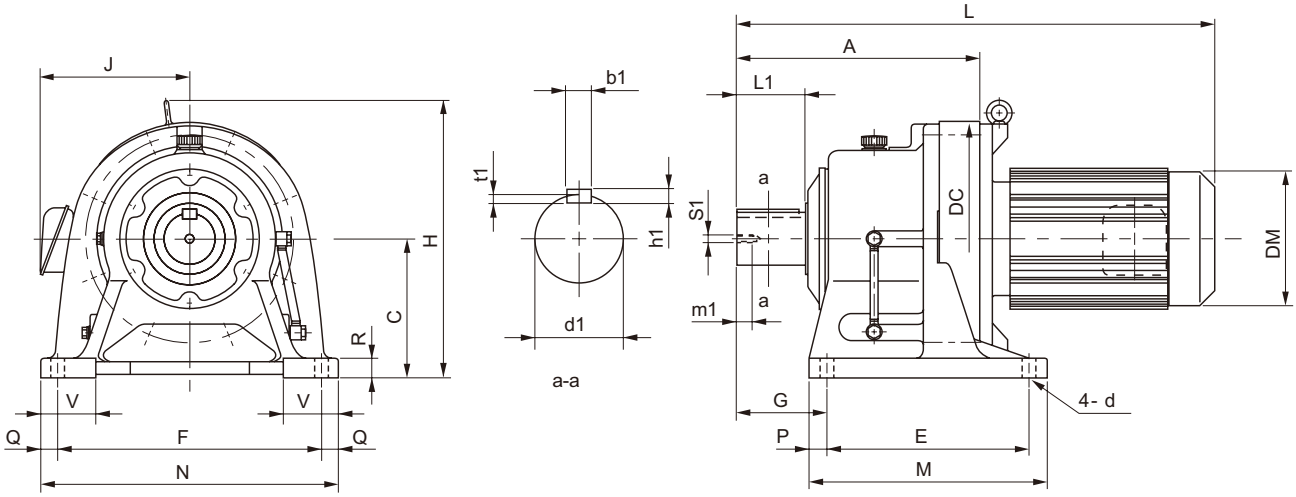

Frame size	A	C	DC	E	F	G	M	N	P	Q	R	V	d	Output Shaft (Note: 2, 3, 6)						
														d1	L1	b1	h1	t1	S1	m1
6205	502	250	448	360	440	215	440	530	40	45	35	100	26	100	165	28	16	10	M20	34
6215	526	265	485	395	480	210	475	580	40	50	40	110	26	110	165	28	16	10	M20	34

Model (Note: 5)	Motor		Standard					With Brake				
	[kW]	[P]	L	H	J	DM	W [kg]	L	H	J	DM	W [kg]
CHHM15 - 6205 - (B) - Ratio	11	4	972	530	211	251	313	1067	530	211	251	332
CHHM20 - 6205 - (B) - Ratio	15	4	1042	530	261	324	367	1147	530	261	324	404
CHHM206 - 6205 - (B) - Ratio	15	6	1127	530	340	394	438	1292	530	340	394	484
CHHM25 - 6205 - (B) - Ratio	18.5	4	1127	530	340	394	438	1292	530	340	394	488
CHHM30 - 6205 - (B) - Ratio	22	4	1127	530	340	394	438	1292	530	340	394	488
CHHM306 - 6205 - (B) - Ratio	22	6	1127	530	340	394	451	1292	530	340	394	501
CHHM40 - 6205 - (B) - Ratio	30	4	1127	530	340	394	451	1292	530	340	394	501
CHHM406 - 6205 - (B) - Ratio	30	6	1242	530	340	394	489	1457	530	340	394	588
CHHM50 - 6205 - (B) - Ratio	37	4	1242	530	340	394	489	1457	530	340	394	588
CHHM506 - 6205 - (B) - Ratio	37	6	1242	530	340	394	489	1457	530	340	394	588
CHHM60 - 6205 - (B) - Ratio	45	4	1242	530	340	394	489	1457	530	340	394	588
CHHM606 - 6205 - (B) - Ratio	45	6	1297	575	390	484	582	-	-	-	-	-
CHHM75 - 6205 - (B) - Ratio	55	4	1297	575	390	484	582	-	-	-	-	-
CHHM15 - 6215 - (B) - Ratio	11	4	996	575	211	251	395	1091	575	211	251	414
CHHM20 - 6215 - (B) - Ratio	15	4	1066	575	261	324	450	1171	575	261	324	486
CHHM206 - 6215 - (B) - Ratio	15	6	1151	575	340	394	515	1316	575	340	394	565
CHHM25 - 6215 - (B) - Ratio	18.5	4	1151	575	340	394	515	1316	575	340	394	565
CHHM256 - 6215 - (B) - Ratio	18.5	6	1151	575	340	394	528	1316	575	340	394	578
CHHM30 - 6215 - (B) - Ratio	22	4	1151	575	340	394	515	1316	575	340	394	565
CHHM306 - 6215 - (B) - Ratio	22	6	1151	575	340	394	528	1316	575	340	394	578
CHHM40 - 6215 - (B) - Ratio	30	4	1151	575	340	394	528	1316	575	340	394	578
CHHM406 - 6215 - (B) - Ratio	30	6	1266	575	340	394	566	1481	575	340	394	666
CHHM50 - 6215 - (B) - Ratio	37	4	1266	575	340	394	566	1481	575	340	394	666
CHHM506 - 6215 - (B) - Ratio	37	6	1266	575	340	394	566	1481	575	340	394	666
CHHM60 - 6215 - (B) - Ratio	45	4	1266	575	340	394	566	1481	575	340	394	666
CHHM606 - 6215 - (B) - Ratio	45	6	1321	575	390	484	676	-	-	-	-	-
CHHM75 - 6215 - (B) - Ratio	55	4	1321	575	390	484	676	-	-	-	-	-

Note: 4. □ indicates 0 or 5, expressing combination with reduction ratio. Refer to the Selection Table for details.
5. "B" after the frame size indicates models equipped with brake.
6. Dimension of shaft end: Refer to pages F-28 to F-29 for details.
7. Dimensions in above drawings are subject to change without notice.

Dimension Tables Gearmotors (Horizontal Direction, Foot-Mount)

CHHM[ ]- 6225 to 6235 Note: 1

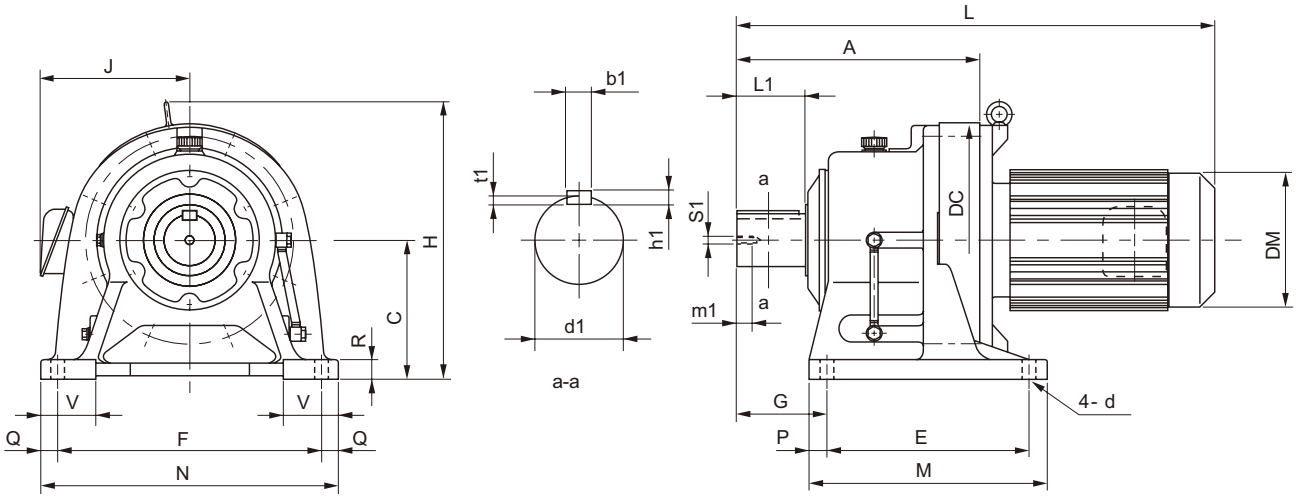

Frame size	A	C	DC	E	F	G	M	N	P	Q	R	V	d	Output Shaft Note: 2, 3, 5						
														d1	L1	b1	h1	t1	S1	m1
6225	566	280	526	420	540	230	520	620	50	40	40	115	33	120	165	32	18	11	M20	34
6235	628	300	562	460	580	260	560	670	50	45	45	120	33	130	200	32	18	11	M24	41

Model Note: 4	Motor		Standard					With Brake				
	[kW]	[P]	L	H	J	DM	W [kg]	L	H	J	DM	W [kg]
CHHM206 - 6225 - (B) - Ratio	15	6	1191	610	340	394	600	1356	610	340	394	650
CHHM25 - 6225 - (B) - Ratio	18.5	4	1191	610	340	394	600	1356	610	340	394	650
CHHM256 - 6225 - (B) - Ratio	18.5	6	1191	610	340	394	613	1356	610	340	394	663
CHHM30 - 6225 - (B) - Ratio	22	4	1191	610	340	394	600	1356	610	340	394	650
CHHM306 - 6225 - (B) - Ratio	22	6	1191	610	340	394	613	1356	610	340	394	663
CHHM40 - 6225 - (B) - Ratio	30	4	1191	610	340	394	613	1356	610	340	394	663
CHHM406 - 6225 - (B) - Ratio	30	6	1306	610	340	394	651	1521	610	340	394	751
CHHM50 - 6225 - (B) - Ratio	37	4	1306	610	340	394	651	1521	610	340	394	751
CHHM506 - 6225 - (B) - Ratio	37	6	1306	610	340	394	651	1521	610	340	394	751
CHHM60 - 6225 - (B) - Ratio	45	4	1306	610	340	394	651	1521	610	340	394	751
CHHM606 - 6225 - (B) - Ratio	45	6	1361	610	390	484	750	-	-	-	-	-
CHHM75 - 6225 - (B) - Ratio	55	4	1361	610	390	484	750	-	-	-	-	-
CHHM206 - 6235 - (B) - Ratio	15	6	1253	667	340	394	698	1418	667	340	394	734
CHHM256 - 6235 - (B) - Ratio	18.5	6	1253	667	340	394	698	1418	667	340	394	748
CHHM306 - 6235 - (B) - Ratio	22	6	1253	667	340	394	698	1418	667	340	394	748
CHHM406 - 6235 - (B) - Ratio	30	6	1368	667	340	394	744	1583	667	340	394	837
CHHM506 - 6235 - (B) - Ratio	37	6	1368	667	340	394	744	1583	667	340	394	837
CHHM606 - 6235 - (B) - Ratio	45	6	1423	667	390	484	833	-	-	-	-	-
CHHM756 - 6235 - (B) - Ratio	55	6	1503	667	390	485	887	-	-	-	-	-

Note: 1. [ ] indicates motor capacity.
2. Dimension of shaft end diameter: Dimension tolerance conforms to JIS B 0401-1976 "h6."
3. Dimension of shaft end key: Dimension tolerance conforms to JIS B 1301-1996 "Parallel Key."

Dimension Tables Gearmotors (Horizontal Direction, Foot-Mount)

CHHM[ ]- 6245 to 6265 (Note: 1)

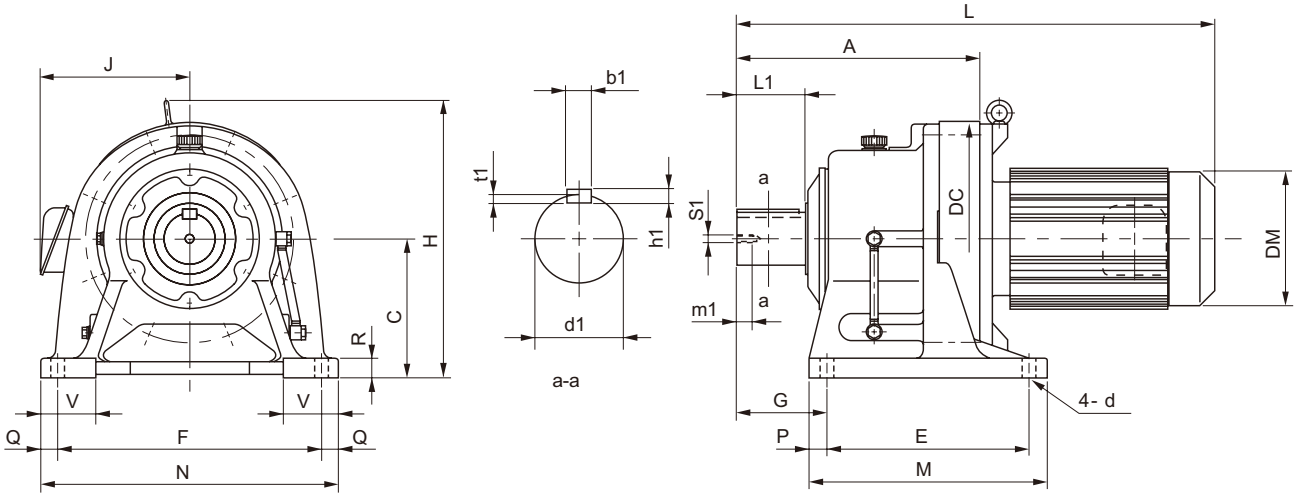

Frame size	A	C	DC	E	F	G	M	N	P	Q	R	V	d	Output Shaft (Note: 2, 3, 5)						
														d1	L1	b1	h1	t1	S1	m1
6245	657	335	614	480	630	263	580	720	50	45	45	128	39	140	200	36	20	12	M24	41
6255	775	375	670	520	670	320	630	780	55	55	50	140	39	160	240	40	22	13	M30	49
6265	892	400	736	590	770	390	700	880	55	55	55	160	45	170	300	40	22	13	M30	49

Model (Note: 4)	Motor		Standard					With Brake				
	[kW]	[P]	L	H	J	DM	W [kg]	L	H	J	DM	W [kg]
CHHM206 - 6245 - (B) - Ratio	15	6	1282	729	340	394	824	1447	729	340	394	857
CHHM256 - 6245 - (B) - Ratio	18.5	6	1282	729	340	394	824	1447	729	340	394	871
CHHM306 - 6245 - (B) - Ratio	22	6	1282	729	340	394	824	1447	729	340	394	871
CHHM406 - 6245 - (B) - Ratio	30	6	1397	729	340	394	870	1612	729	340	394	958
CHHM506 - 6245 - (B) - Ratio	37	6	1397	729	340	394	870	1612	729	340	394	958
CHHM606 - 6245 - (B) - Ratio	45	6	1452	729	390	484	961	-	-	-	-	-
CHHM756 - 6245 - (B) - Ratio	55	6	1532	729	390	485	1010	-	-	-	-	-
CHHM206 - 6255 - (B) - Ratio	15	6	1400	815	340	394	1155	1565	815	340	394	1188
CHHM256 - 6255 - (B) - Ratio	18.5	6	1400	815	340	394	1155	1565	815	340	394	1202
CHHM306 - 6255 - (B) - Ratio	22	6	1400	815	340	394	1155	1565	815	340	394	1202
CHHM406 - 6255 - (B) - Ratio	30	6	1515	815	340	394	1200	1730	815	340	394	1288
CHHM506 - 6255 - (B) - Ratio	37	6	1515	815	340	394	1200	1730	815	340	394	1288
CHHM606 - 6255 - (B) - Ratio	45	6	1570	815	390	484	1280	-	-	-	-	-
CHHM756 - 6255 - (B) - Ratio	55	6	1650	815	390	485	1335	-	-	-	-	-
CHHM306 - 6265 - (B) - Ratio	22	6	1517	874	340	394	1400	1727	874	340	394	1447
CHHM406 - 6265 - (B) - Ratio	30	6	1632	874	340	394	1445	1847	874	340	394	1533
CHHM506 - 6265 - (B) - Ratio	37	6	1632	874	340	394	1445	1847	874	340	394	1533
CHHM606 - 6265 - (B) - Ratio	45	6	1687	874	390	484	1540	-	-	-	-	-

Note: 4. "B" after the frame size indicates models equipped with brake.
5. Dimension of shaft end: Refer to pages F-28 to F-29 for details.
6. Dimensions in above drawings are subject to change without notice.

Dimension Tables Gearmotors (Universal Direction, Foot-Mount)

CNHM[Note: 1]- 606□DA to 612□DB

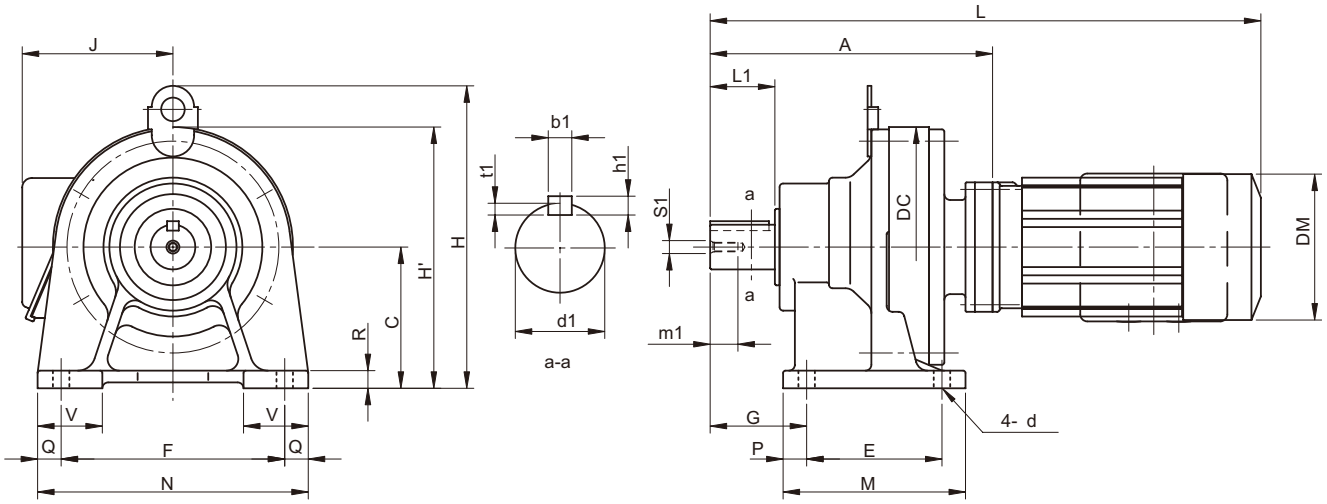

Frame size Note: 4	A	C	DC	E	F	G	M	N	P	Q	R	V	d	Output Shaft Note: 2, 3, 6						
														d1	L1	b1	h1	t1	S1	m1
606□DA	125	80	110	60	120	41	84	144	12	12	10	48	9	14	25	5	5	3	M5	16
607□DA	131	80	110	60	120	47	84	144	12	12	10	48	9	18	30	6	6	3.5	M6	16
609□DA	190	100	150	90	150	60	135	180	15	15	12	49	11	28	35	8	7	4	M8	20
610□DA	204	100	150	90	150	60	135	180	15	15	12	65	11	28	35	8	7	4	M8	20
612□DA	240	120	204	115	190	82	155	230	20	20	15	55	14	38	55	10	8	5	M8	20
612□DB	252	120	204	115	190	82	155	230	20	20	15	55	14	38	55	10	8	5	M8	20

Model Note: 4, 5	Motor		Standard						With Brake					
	[kW]	[P]	L	H	H'	J	DM	W [kg]	L	H	H'	J	DM	W [kg]
CNHM01 - 606□DA - (B) - Ratio	0.1	4	287	-	140	113	119	9	294	-	138	113	124	10
CNHM01 - 607□DA - (B) - Ratio	0.1	4	293	-	140	113	119	9	300	-	138	113	124	10
CNHM02 - 607□DA - (B) - Ratio	0.2	4	311	-	140	113	124	10	339	-	138	113	124	11
CNHM01 - 609□DA - (B) - Ratio	0.1	4	352	207	-	113	119	17	359	207	-	113	124	18
CNHM02 - 609□DA - (B) - Ratio	0.2	4	370	207	-	113	124	18	398	207	-	113	124	19
CNHM03 - 609□DA - (B) - Ratio	0.25	4	370	207	-	113	124	18	398	207	-	113	124	19
CNHM05 - 609□DA - (B) - Ratio	0.4	4	386	207	-	113	124	19	418	207	-	113	124	20
CNHM01 - 610□DA - (B) - Ratio	0.1	4	366	207	-	113	119	19	373	207	-	113	124	20
CNHM02 - 610□DA - (B) - Ratio	0.2	4	384	207	-	113	124	20	412	207	-	113	124	21
CNHM03 - 610□DA - (B) - Ratio	0.25	4	384	207	-	113	124	20	412	207	-	113	124	21
CNHM05 - 610□DA - (B) - Ratio	0.4	4	400	207	-	113	124	21	432	207	-	113	124	22
CNHM01 - 612□DA - (B) - Ratio	0.1	4	402	257	-	113	119	30	409	257	-	113	124	31
CNHM02 - 612□DA - (B) - Ratio	0.2	4	420	257	-	113	124	31	448	257	-	113	124	32
CNHM03 - 612□DA - (B) - Ratio	0.25	4	420	257	-	113	124	31	448	257	-	113	124	32
CNHM05 - 612□DA - (B) - Ratio	0.4	4	436	257	-	113	124	32	468	257	-	113	124	33
CNHM01 - 612□DB - (B) - Ratio	0.1	4	414	257	-	113	119	33	421	257	-	113	124	35
CNHM02 - 612□DB - (B) - Ratio	0.2	4	432	257	-	113	124	34	473	257	-	113	124	36
CNHM03 - 612□DB - (B) - Ratio	0.25	4	432	257	-	113	124	34	473	257	-	113	124	36
CNHM05 - 612□DB - (B) - Ratio	0.4	4	448	257	-	113	124	35	473	257	-	113	124	37
CNHM08 - 612□DB - (B) - Ratio	0.55	4	489	257	-	143	160	39	532	257	-	143	160	42
CNHM1 - 612□DB - (B) - Ratio	0.75	4	489	257	-	143	160	39	532	257	-	143	160	42
CNHM1H - 612□DB - (B) - Ratio	1.1	4	516	257	-	148	169	42	578	257	-	148	169	47
CNHM2 - 612□DB - (B) - Ratio	1.5	4	516	257	-	148	169	42	578	257	-	148	169	47

Note: 1. ⬚ indicates motor capacity.
2. Dimension of shaft end diameter: Dimension tolerance conforms to JIS B 0401-1976 "h6."
3. Dimension of shaft end key: Dimension tolerance conforms to JIS B 1301-1996 "Parallel Key."

Dimension Tables Gearmotors (Horizontal Direction, Foot-Mount)

CHHM□ Note: 1 - 613□DA to 614□DC

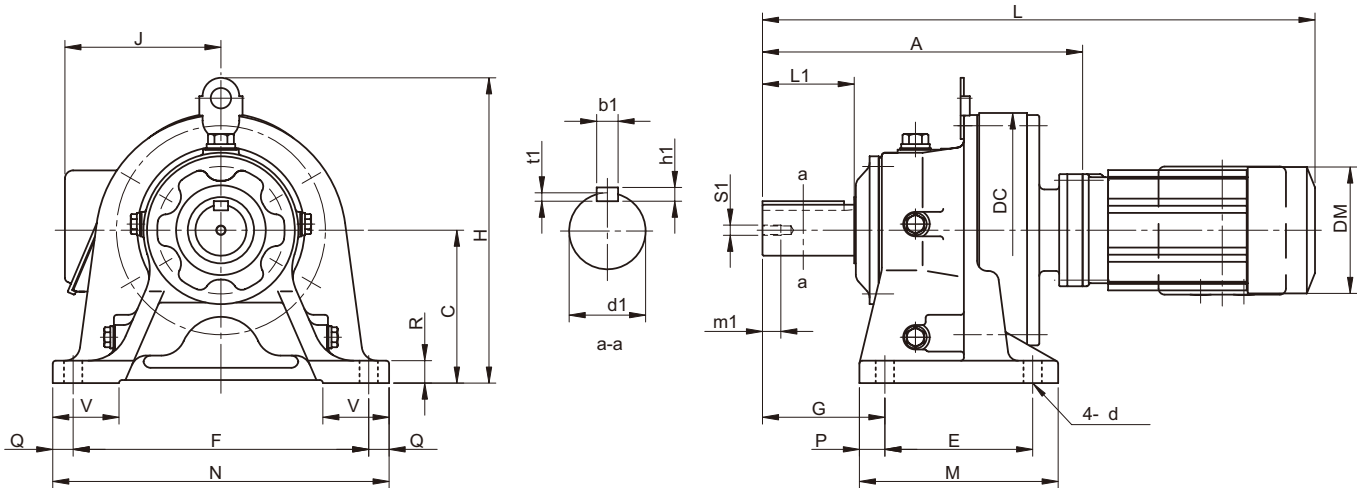

Frame size Note: 4	A	C	DC	E	F	G	M	N	P	Q	R	V	d	Output Shaft Note: 2, 3, 6						
														d1	L1	b1	h1	t1	S1	m1
613□DA	294	150	230	145	290	100	195	330	25	20	22	65	18	50	70	14	9	5.5	M10	18
613□DB	303	150	230	145	290	100	195	330	25	20	22	65	18	50	70	14	9	5.5	M10	18
613□DC	317	150	230	145	290	100	195	330	25	20	22	65	18	50	70	14	9	5.5	M10	18
614□DA	314	150	230	145	290	120	195	330	25	20	22	65	18	50	90	14	9	5.5	M10	18
614□DB	323	150	230	145	290	120	195	330	25	20	22	65	18	50	90	14	9	5.5	M10	18
614□DC	337	150	230	145	290	120	195	330	25	20	22	65	18	50	90	14	9	5.5	M10	18

Model Note: 4, 5	Motor		Standard					With Brake				
	[kW]	[P]	L	H	J	DM	W [kg]	L	H	J	DM	W [kg]
CHHM02 - 613□DA - (B) - Ratio	0.2	4	474	300	113	124	47	502	300	113	124	47
CHHM03 - 613□DA - (B) - Ratio	0.25	4	474	300	113	124	48	522	300	113	124	49
CHHM05 - 613□DA - (B) - Ratio	0.4	4	490	300	113	124	48	522	300	113	124	49
CHHM02 - 613□DB - (B) - Ratio	0.2	4	483	300	113	124	49	511	300	113	124	51
CHHM03 - 613□DB - (B) - Ratio	0.25	4	483	300	113	124	49	511	300	113	124	51
CHHM05 - 613□DB - (B) - Ratio	0.4	4	499	300	113	124	50	531	300	113	124	52
CHHM08 - 613□DB - (B) - Ratio	0.55	4	540	263	143	160	54	583	263	143	160	57
CHHM1 - 613□DB - (B) - Ratio	0.75	4	540	263	143	160	54	583	263	143	160	57
CHHM1H - 613□DB - (B) - Ratio	1.1	4	573	270	148	169	57	635	270	148	169	62
CHHM2 - 613□DB - (B) - Ratio	1.5	4	573	270	148	169	57	635	270	148	169	62
CHHM08 - 613□DC - (B) - Ratio	0.55	4	554	265	143	160	56	597	265	143	160	59
CHHM1 - 613□DC - (B) - Ratio	0.75	4	554	265	143	160	56	597	265	143	160	59
CHHM2 - 613□DC - (B) - Ratio	1.5	4	587	272	148	169	59	649	272	148	169	64
CHHM3 - 613□DC - (B) - Ratio	2.2	4	607	276	155	182	64	670	276	155	182	70
CHHM02 - 614□DA - (B) - Ratio	0.2	4	494	300	113	124	47	522	300	113	124	48
CHHM03 - 614□DA - (B) - Ratio	0.25	4	494	300	113	124	47	522	300	113	124	48
CHHM05 - 614□DA - (B) - Ratio	0.4	4	510	300	113	124	48	542	300	113	124	49
CHHM02 - 614□DB - (B) - Ratio	0.2	4	503	300	113	124	49	531	300	113	124	51
CHHM03 - 614□DB - (B) - Ratio	0.25	4	503	300	113	124	49	531	300	113	124	51
CHHM05 - 614□DB - (B) - Ratio	0.4	4	519	300	113	124	50	551	300	113	124	52
CHHM08 - 614□DB - (B) - Ratio	0.55	4	560	263	143	160	54	603	263	143	160	57
CHHM1 - 614□DB - (B) - Ratio	0.75	4	560	263	143	160	54	603	263	143	160	57
CHHM1H - 614□DB - (B) - Ratio	1.1	4	593	270	148	169	57	655	270	148	169	62
CHHM2 - 614□DB - (B) - Ratio	1.5	4	593	270	148	169	57	655	270	148	169	62
CHHM08 - 614□DC - (B) - Ratio	0.55	4	574	265	143	160	56	617	265	143	160	59
CHHM1 - 614□DC - (B) - Ratio	0.75	4	574	265	143	160	56	617	265	143	160	59
CHHM1H - 614□DC - (B) - Ratio	1.1	4	607	270	148	169	60	669	270	148	169	65
CHHM2 - 614□DC - (B) - Ratio	1.5	4	607	270	148	169	60	669	270	148	169	65
CHHM3 - 614□DC - (B) - Ratio	2.2	4	627	276	155	182	64	690	276	155	182	70

Note: 4. □ indicates 0 or 5, expressing combination with reduction ratio. Refer to the Selection Table for details.
5. "B" after the frame size indicates models equipped with brake.
6. Dimension of shaft end: Refer to pages F-28 to F-29 for details.
7. Dimensions in above drawings are subject to change without notice.

Dimension Tables Gearmotors (Horizontal Direction, Foot-Mount)

CHHM□ Note: 1 - 616□DA to 618□DA

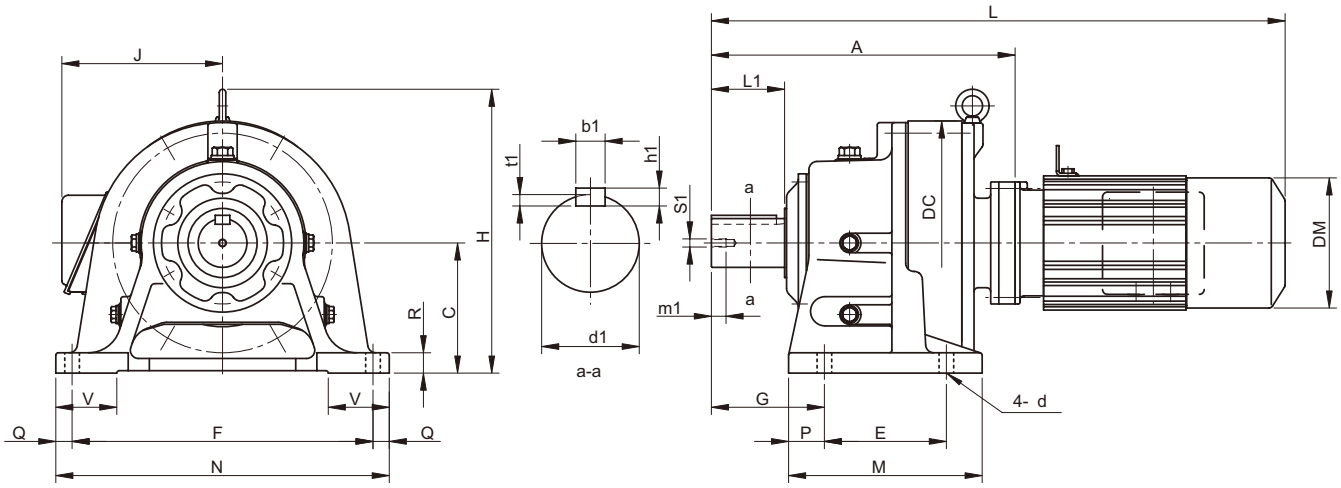

Frame size Note: 4	A	C	DC	E	F	G	M	N	P	Q	R	V	d	Output Shaft Note: 2, 3, 6						
														d1	L1	b1	h1	t1	S1	m1
616□DA	373	160	300	150	370	139	238	410	44	20	25	75	18	60	90	18	11	7	M10	18
616□DB	387	160	300	150	370	139	238	410	44	20	25	75	18	60	90	18	11	7	M10	18
617□DA	418	200	340	275	380	125	335	430	30	25	30	80	22	70	90	20	12	7.5	M12	24
617□DB	432	200	340	275	380	125	335	430	30	25	30	80	22	70	90	20	12	7.5	M12	24
618□DA	474	220	370	320	420	145	380	470	30	25	30	85	22	80	110	22	14	9	M12	24

Model Note: 4, 5	Motor		Standard					With Brake				
	[kW]	[P]	L	H	J	DM	W [kg]	L	H	J	DM	W [kg]
CHHM02 - 616□DA - (B) - Ratio	0.2	4	553	349	113	124	90	581	349	113	124	92
CHHM03 - 616□DA - (B) - Ratio	0.25	4	553	349	113	124	90	581	349	113	124	92
CHHM05 - 616□DA - (B) - Ratio	0.4	4	569	349	113	124	91	601	349	113	124	93
CHHM08 - 616□DA - (B) - Ratio	0.55	4	610	349	143	160	95	653	349	143	160	98
CHHM1 - 616□DA - (B) - Ratio	0.75	4	610	349	143	160	95	653	349	143	160	98
CHHM1H - 616□DA - (B) - Ratio	1.1	4	643	349	148	169	99	705	349	148	169	104
CHHM2 - 616□DA - (B) - Ratio	1.5	4	643	349	148	169	99	705	349	148	169	104
CHHM08 - 616□DB - (B) - Ratio	0.55	4	624	349	143	160	97	667	349	143	160	100
CHHM1 - 616□DB - (B) - Ratio	0.75	4	624	349	143	160	97	667	349	143	160	100
CHHM1H - 616□DB - (B) - Ratio	1.1	4	657	349	148	169	101	719	349	148	169	106
CHHM2 - 616□DB - (B) - Ratio	1.5	4	657	349	148	169	101	719	349	148	169	106
CHHM3 - 616□DB - (B) - Ratio	2.2	4	677	349	155	182	105	740	349	155	182	111
CHHM02 - 617□DA - (B) - Ratio	0.2	4	598	416	113	124	120	626	416	113	124	127
CHHM03 - 617□DA - (B) - Ratio	0.25	4	598	416	113	124	120	626	416	113	124	127
CHHM05 - 617□DA - (B) - Ratio	0.4	4	614	416	113	124	126	646	416	113	124	128
CHHM08 - 617□DA - (B) - Ratio	0.55	4	655	416	143	160	130	698	416	143	160	133
CHHM1 - 617□DA - (B) - Ratio	0.75	4	655	416	143	160	130	698	416	143	160	133
CHHM1H - 617□DA - (B) - Ratio	1.1	4	688	416	148	169	133	750	416	148	169	138
CHHM2 - 617□DA - (B) - Ratio	1.5	4	688	416	148	169	133	750	416	148	169	138
CHHM08 - 617□DB - (B) - Ratio	0.55	4	669	416	143	160	127	712	416	143	160	134
CHHM1 - 617□DB - (B) - Ratio	0.75	4	669	416	143	160	127	712	416	143	160	134
CHHM1H - 617□DB - (B) - Ratio	1.1	4	702	416	148	169	136	764	416	148	169	141
CHHM2 - 617□DB - (B) - Ratio	1.5	4	702	416	148	169	136	764	416	148	169	141
CHHM3 - 617□DB - (B) - Ratio	2.2	4	722	416	155	182	140	785	416	155	182	146
CHHM05 - 618□DA - (B) - Ratio	0.4	4	670	451	113	124	171	702	451	113	124	173
CHHM08 - 618□DA - (B) - Ratio	0.55	4	711	451	143	160	175	754	451	143	160	178
CHHM1 - 618□DA - (B) - Ratio	0.75	4	711	451	143	160	175	754	451	143	160	178
CHHM1H - 618□DA - (B) - Ratio	1.1	4	744	451	148	169	179	806	451	148	169	184
CHHM2 - 618□DA - (B) - Ratio	1.5	4	744	451	148	169	179	806	451	148	169	184
CHHM3 - 618□DA - (B) - Ratio	2.2	4	764	451	155	182	183	827	451	155	182	189

Note: 1. □ indicates motor capacity.
2. Dimension of shaft end diameter: Dimension tolerance conforms to JIS B 0401-1976 "h6."
3. Dimension of shaft end key: Dimension tolerance conforms to JIS B 1301-1996 "Parallel Key."

Dimension Tables Gearmotors (Horizontal Direction, Foot-Mount)

CHHM□ Note: 1 - 616□DC to 619□DA

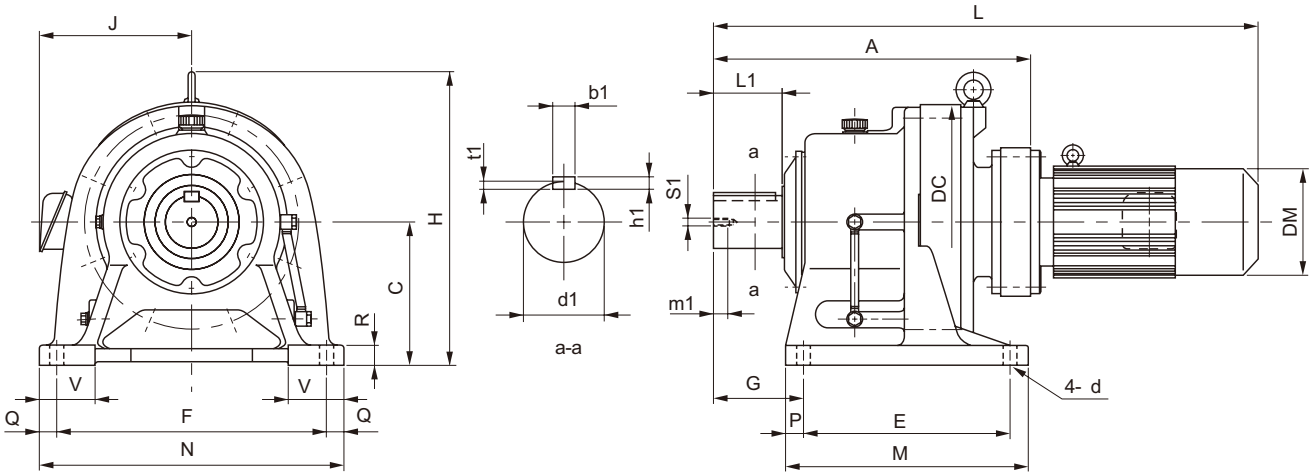

Frame size Note: 4	A	C	DC	E	F	G	M	N	P	Q	R	V	d	Output Shaft Note: 2, 3, 6						
														d1	L1	b1	h1	t1	S1	m1
616□DC	389	160	300	150	370	139	238	410	44	20	25	75	18	60	90	18	11	7	M10	18
617D□C	436	200	340	275	380	125	335	430	30	25	30	80	22	70	90	20	12	7.5	M12	24
618□DB	496	220	370	320	420	145	380	470	30	25	30	85	22	80	110	22	14	9	M12	24
619□DA	556	250	430	380	480	170	440	530	30	25	35	90	26	95	135	25	14	9	M20	34

Model Note: 4, 5	Motor		Standard					With Brake				
	[kW]	[P]	L	H	J	DM	W [kg]	L	H	J	DM	W [kg]
CHHM1H - 616□DC - (B) - Ratio	1.1	4	659	349	148	169	107	721	349	148	169	112
CHHM2 - 616□DC - (B) - Ratio	1.5	4	659	349	148	169	107	721	349	148	169	112
CHHM3 - 616□DC - (B) - Ratio	2.2	4	679	349	155	182	111	742	349	155	182	118
CHHM4 - 616□DC - (B) - Ratio	3.0	4	702	349	166	222	121	774	349	166	222	131
CHHM5 - 616□DC - (B) - Ratio	3.7	4	702	349	166	222	121	774	349	166	222	131
CHHM8 - 616□DC - (B) - Ratio	5.5	4	746	349	166	222	128	818	349	166	222	138
CHHM1H - 617□DC - (B) - Ratio	1.1	4	706	416	148	169	141	768	416	148	169	146
CHHM2 - 617□DC - (B) - Ratio	1.5	4	706	416	148	169	141	768	416	148	169	146
CHHM3 - 617□DC - (B) - Ratio	2.2	4	726	416	155	182	145	789	416	155	182	152
CHHM4 - 617□DC - (B) - Ratio	3.0	4	749	416	166	222	155	821	416	166	222	165
CHHM5 - 617□DC - (B) - Ratio	3.7	4	749	416	166	222	155	821	416	166	222	165
CHHM8 - 617□DC - (B) - Ratio	5.5	4	793	416	166	222	162	865	416	166	222	172
CHHM1H - 618□DB - (B) - Ratio	1.1	4	766	451	148	169	194	828	451	148	169	199
CHHM2 - 618□DB - (B) - Ratio	1.5	4	766	451	148	169	194	828	451	148	169	199
CHHM3 - 618□DB - (B) - Ratio	2.2	4	786	451	155	182	197	849	451	155	182	204
CHHM4 - 618□DB - (B) - Ratio	3.0	4	809	451	166	222	207	881	451	166	222	217
CHHM5 - 618□DB - (B) - Ratio	3.7	4	809	451	166	222	207	881	451	166	222	217
CHHM8 - 618□DB - (B) - Ratio	5.5	4	853	451	166	222	214	925	451	166	222	224
CHHM10 - 618□DB - (B) - Ratio	7.5	4	876	451	211	251	229	971	451	211	251	247
CHHM15 - 618□DB - (B) - Ratio	11	4	936	451	211	251	243	1031	451	211	251	261
CHHM1 - 619□DA - (B) - Ratio	0.75	4	793	531	143	160	250	836	531	143	160	253
CHHM1H - 619□DA - (B) - Ratio	1.1	4	826	531	148	169	254	888	531	148	169	259
CHHM2 - 619□DA - (B) - Ratio	1.5	4	826	531	148	169	254	888	531	148	169	259
CHHM3 - 619□DA - (B) - Ratio	2.2	4	846	531	155	182	258	909	531	155	182	265
CHHM4 - 619□DA - (B) - Ratio	3.0	4	869	531	166	222	268	941	531	166	222	278
CHHM5 - 619□DA - (B) - Ratio	3.7	4	869	531	166	222	268	941	531	166	222	278
CHHM8 - 619□DA - (B) - Ratio	5.5	4	913	531	166	222	275	985	531	166	222	285

Note: 4. □ indicates 0 or 5, expressing combination with reduction ratio. Refer to the Selection Table for details.
5. "B" after the frame size indicates models equipped with brake.
6. Dimension of shaft end: Refer to pages F-28 to F-29 for details.
7. Dimensions in above drawings are subject to change without notice.

Dimension Tables Gearmotors (Horizontal Direction, Foot-Mount)

CHHM□ Note: 1 - 619□DB to 6215DA

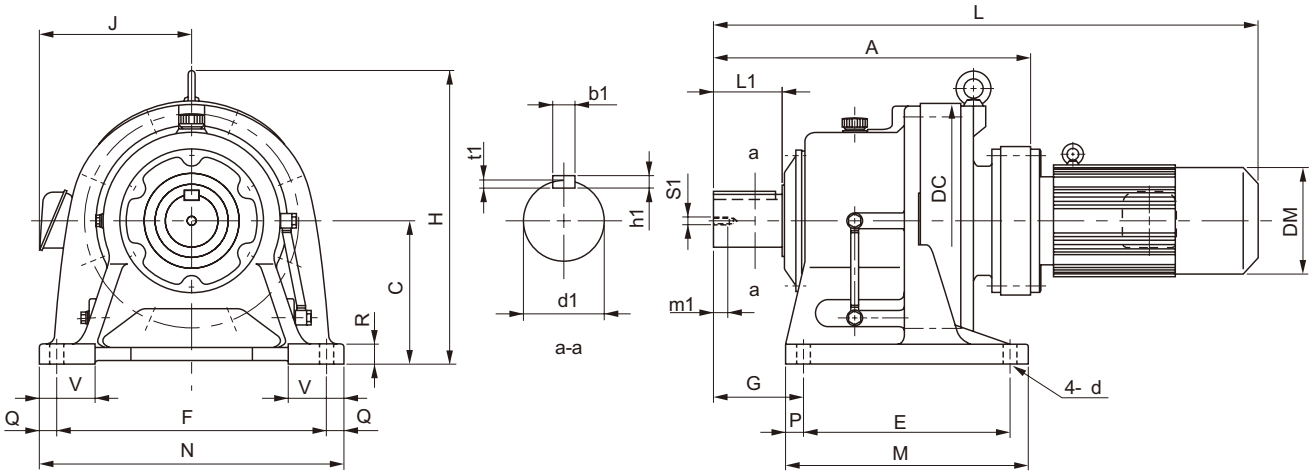

Frame size Note: 4	A	C	DC	E	F	G	M	N	P	Q	R	V	d	Output Shaft Note: 2, 3, 6						
														d1	L1	b1	h1	t1	S1	m1
619□DB	572	250	430	380	480	170	440	530	30	25	35	90	26	95	135	25	14	9	M20	34
6205DA	597	250	448	360	440	215	440	530	40	45	35	100	26	100	165	28	16	10	M20	34
6205DB	624	250	448	360	440	215	440	530	40	45	35	100	26	100	165	28	16	10	M20	34
6215DA	650	265	485	395	480	210	475	580	40	50	40	110	26	110	165	28	16	10	M20	34

Model Note: 4, 5	Motor		Standard					With Brake				
	[kW]	[P]	L	H	J	DM	W [kg]	L	H	J	DM	W [kg]
CHHM2 - 619□DB - (B) - Ratio	1.5	4	842	531	148	169	261	904	531	148	169	266
CHHM3 - 619□DB - (B) - Ratio	2.2	4	862	531	155	182	265	925	531	155	182	272
CHHM4 - 619□DB - (B) - Ratio	3.0	4	885	531	166	222	275	957	531	166	222	285
CHHM5 - 619□DB - (B) - Ratio	3.7	4	885	531	166	222	275	957	531	166	222	285
CHHM8 - 619□DB - (B) - Ratio	5.5	4	929	531	166	222	282	1001	531	166	222	292
CHHM10 - 619□DB - (B) - Ratio	7.5	4	952	531	211	251	297	1047	531	211	251	315
CHHM15 - 619□DB - (B) - Ratio	11	4	1012	531	211	251	311	1107	531	211	251	329
CHHM20 - 619□DB - (B) - Ratio	15	4	1102	531	261	324	363	1207	531	261	324	397
CHHM1 - 6205DA - (B) - Ratio	0.75	4	834	530	143	160	269	877	530	143	160	272
CHHM2 - 6205DA - (B) - Ratio	1.5	4	867	530	148	169	273	929	530	148	169	278
CHHM3 - 6205DA - (B) - Ratio	2.2	4	887	530	155	182	277	949	530	155	182	284
CHHM4 - 6205DA - (B) - Ratio	3.0	4	910	530	166	222	287	982	530	166	222	297
CHHM5 - 6205DA - (B) - Ratio	3.7	4	910	530	166	222	287	982	530	166	222	297
CHHM8 - 6205DA - (B) - Ratio	5.5	4	954	530	166	222	294	1026	530	166	222	304
CHHM3 - 6205DB - (B) - Ratio	2.2	4	914	530	155	182	289	977	530	155	182	296
CHHM4 - 6205DB - (B) - Ratio	3.0	4	937	530	166	222	299	1009	530	166	222	309
CHHM5 - 6205DB - (B) - Ratio	3.7	4	937	530	166	222	299	1009	530	166	222	309
CHHM8 - 6205DB - (B) - Ratio	5.5	4	981	530	166	222	306	1053	530	166	222	316
CHHM10 - 6205DB - (B) - Ratio	7.5	4	1004	530	211	251	321	1099	530	211	251	339
CHHM15 - 6205DB - (B) - Ratio	11	4	1064	530	211	251	334	1159	530	211	251	352
CHHM20 - 6205DB - (B) - Ratio	15	4	1154	530	261	324	386	1259	530	261	324	419
CHHM2 - 6215DA - (B) - Ratio	1.5	4	920	575	148	169	367	982	575	148	169	372
CHHM3 - 6215DA - (B) - Ratio	2.2	4	940	575	155	182	370	1003	575	155	182	377
CHHM4 - 6215DA - (B) - Ratio	3.0	4	963	575	166	222	380	1035	575	166	222	390
CHHM5 - 6215DA - (B) - Ratio	3.7	4	963	575	166	222	380	1035	575	166	222	390
CHHM8 - 6215DA - (B) - Ratio	5.5	4	1007	575	166	222	387	1079	575	166	222	397
CHHM10 - 6215DA - (B) - Ratio	7.5	4	1030	575	211	251	402	1125	575	211	251	420
CHHM15 - 6215DA - (B) - Ratio	11	4	1090	575	211	251	415	1185	575	211	251	433
CHHM20 - 6215DA - (B) - Ratio	15	4	1180	575	261	324	467	1285	575	261	324	501

Note: 1. □ indicates motor capacity.
2. Dimension of shaft end diameter: Dimension tolerance conforms to JIS B 0401-1976 "h6."
3. Dimension of shaft end key: Dimension tolerance conforms to JIS B 1301-1996 "Parallel Key."

Dimension Tables Gearmotors (Horizontal Direction, Foot-Mount)

CHHM□ - 6215DB to 6225DB

Note: 1

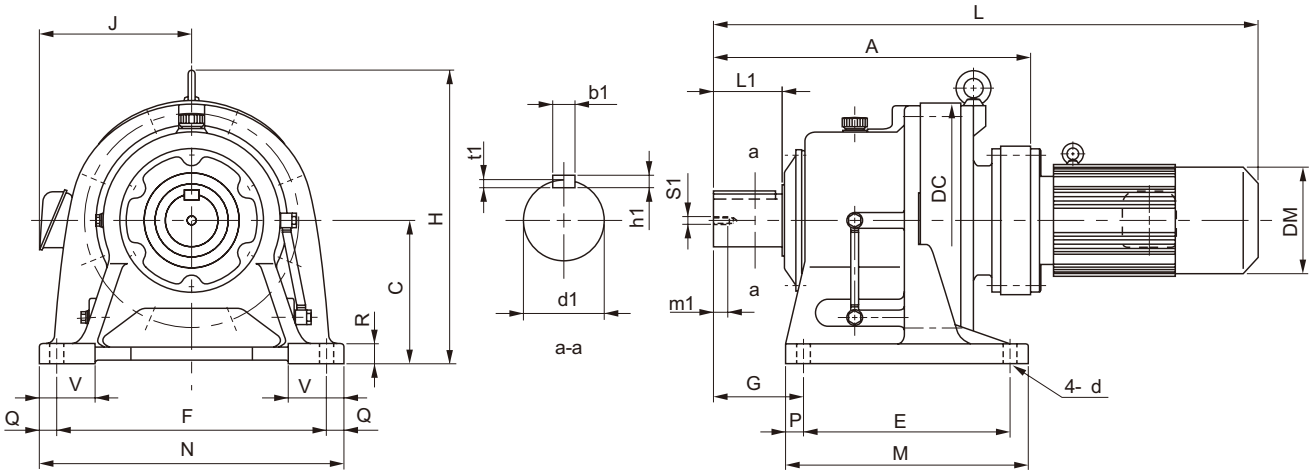

Frame size	A	C	DC	E	F	G	M	N	P	Q	R	V	d	Output Shaft Note: 2, 3, 6						
														d1	L1	b1	h1	t1	S1	m1
6215DB	675	265	485	395	480	210	475	580	40	50	40	110	26	110	165	28	16	10	M20	34
6225DA	692	280	526	420	540	230	520	620	50	40	40	115	33	120	165	32	18	11	M20	34
6225DB	735	280	526	420	540	230	520	620	50	40	40	115	33	120	165	32	18	11	M20	34

Model Note: 5	Motor		Standard					With Brake				
	[kW]	[P]	L	H	J	DM	W [kg]	L	H	J	DM	W [kg]
CHHM5 - 6215DB - (B) - Ratio	3.7	4	993	575	166	222	399	1065	575	166	222	409
CHHM8 - 6215DB - (B) - Ratio	5.5	4	1037	575	166	222	406	1109	575	166	222	416
CHHM10 - 6215DB - (B) - Ratio	7.5	4	1060	575	211	251	422	1155	575	211	251	439
CHHM15 - 6215DB - (B) - Ratio	11	4	1120	575	211	251	436	1215	575	211	251	453
CHHM20 - 6215DB - (B) - Ratio	15	4	1205	575	261	324	489	1310	575	261	324	523
CHHM25 - 6215DB - (B) - Ratio	18.5	4	1300	575	340	394	564	1465	575	340	394	615
CHHM30 - 6215DB - (B) - Ratio	22	4	1300	575	340	394	564	1465	575	340	394	615
CHHM2 - 6225DA - (B) - Ratio	1.5	4	962	610	148	169	441	1024	610	148	169	446
CHHM3 - 6225DA - (B) - Ratio	2.2	4	982	610	155	182	444	1045	610	155	182	451
CHHM4 - 6225DA - (B) - Ratio	3.0	4	1005	610	166	222	454	1077	610	166	222	464
CHHM5 - 6225DA - (B) - Ratio	3.7	4	1005	610	166	222	454	1077	610	166	222	464
CHHM8 - 6225DA - (B) - Ratio	5.5	4	1049	610	166	222	461	1121	610	166	222	471
CHHM10 - 6225DA - (B) - Ratio	7.5	4	1072	610	211	251	476	1167	610	211	251	494
CHHM15 - 6225DA - (B) - Ratio	11	4	1132	610	211	251	490	1227	610	211	251	508
CHHM20 - 6225DA - (B) - Ratio	15	4	1222	610	261	324	542	1327	610	261	324	576
CHHM5 - 6225DB - (B) - Ratio	3.7	4	1058	610	166	222	499	1130	610	166	222	510
CHHM8 - 6225DB - (B) - Ratio	5.5	4	1102	610	166	222	506	1174	610	166	222	517
CHHM10 - 6225DB - (B) - Ratio	7.5	4	1125	610	211	251	521	1220	610	211	251	539
CHHM15 - 6225DB - (B) - Ratio	11	4	1185	610	211	251	535	1280	610	211	251	553
CHHM20 - 6225DB - (B) - Ratio	15	4	1265	610	261	324	589	1370	610	261	324	623
CHHM25 - 6225DB - (B) - Ratio	18.5	4	1360	610	340	394	661	1525	610	340	394	712
CHHM30 - 6225DB - (B) - Ratio	22	4	1360	610	340	394	661	1525	610	340	394	712
CHHM40 - 6225DB - (B) - Ratio	30	4	1360	610	340	394	678	1525	610	340	394	729

Note: 4. □ indicates 0 or 5, expressing combination with reduction ratio. Refer to the Selection Table for details.
5. "B" after the frame size indicates models equipped with brake.
6. Dimension of shaft end: Refer to pages F-28 to F-29 for details.
7. Dimensions in above drawings are subject to change without notice.

Dimension Tables Gearmotors (Horizontal Direction, Foot-Mount)

CHHM□ - 6235DA to 6245DB

Note: 1

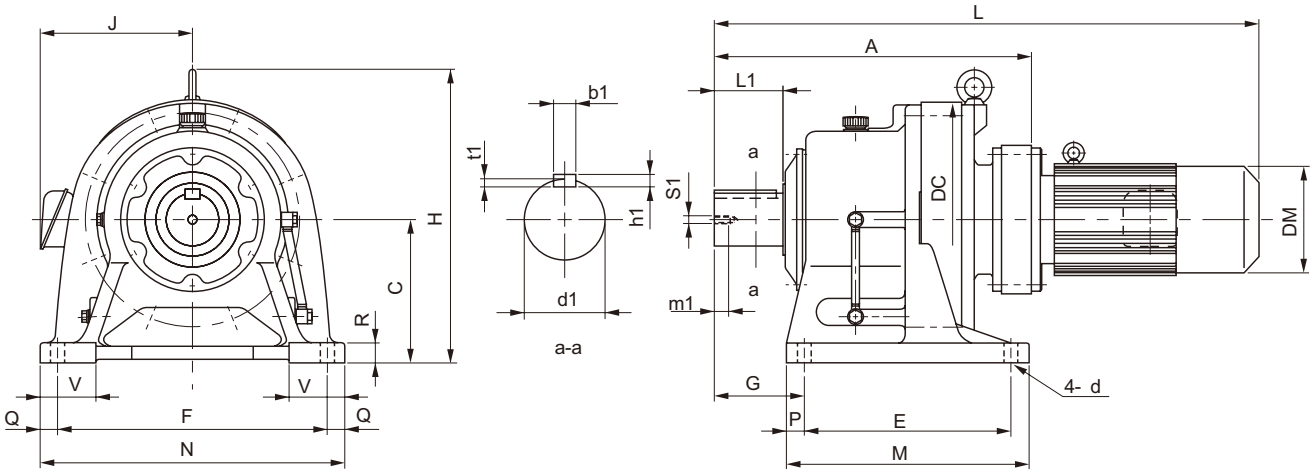

Frame size	A	C	DC	E	F	G	M	N	P	Q	R	V	d	Output Shaft Note: 2, 3, 5						
														d1	L1	b1	h1	t1	S1	m1
6235DA	778	300	562	460	580	260	560	670	50	45	45	120	33	130	200	32	18	11	M24	41
6235DB	800	300	562	460	580	260	560	670	50	45	45	120	33	130	200	32	18	11	M24	41
6245DA	816	335	614	480	630	263	580	720	50	45	45	128	39	140	200	36	20	12	M24	41
6245DB	837	335	614	480	630	263	580	720	50	45	45	128	39	140	200	36	20	12	M24	41

Model Note: 4	Motor		Standard					With Brake				
	[kW]	[P]	L	H	J	DM	W [kg]	L	H	J	DM	W [kg]
CHHM3 - 6235DA - (B) - Ratio	2.2	4	1068	667	155	182	561	1131	667	155	182	567
CHHM4 - 6235DA - (B) - Ratio	3.0	4	1091	667	166	222	570	1163	667	166	222	580
CHHM5 - 6235DA - (B) - Ratio	3.7	4	1091	667	166	222	570	1163	667	166	222	580
CHHM8 - 6235DA - (B) - Ratio	5.5	4	1135	667	166	222	577	1207	667	166	222	587
CHHM10 - 6235DA - (B) - Ratio	7.5	4	1163	667	211	251	593	1258	667	211	251	610
CHHM15 - 6235DA - (B) - Ratio	11	4	1223	667	211	251	607	1318	667	211	251	624
CHHM20 - 6235DA - (B) - Ratio	15	4	1308	667	261	324	660	1413	667	261	324	624
CHHM25 - 6235DA - (B) - Ratio	18.5	4	1403	667	340	394	737	1568	667	340	394	788
CHHM30 - 6235DA - (B) - Ratio	22	4	1403	667	340	394	737	1568	667	340	394	788
CHHM15 - 6235DB - (B) - Ratio	11	4	1245	667	211	251	639	1340	667	211	251	657
CHHM20 - 6235DB - (B) - Ratio	15	4	1330	667	261	324	701	1435	667	261	324	735
CHHM25 - 6235DB - (B) - Ratio	18.5	4	1425	667	340	394	768	1590	667	340	394	819
CHHM30 - 6235DB - (B) - Ratio	22	4	1425	667	340	394	768	1590	667	340	394	819
CHHM40 - 6235DB - (B) - Ratio	30	4	1425	667	340	394	782	1590	667	340	394	825
CHHM50 - 6235DB - (B) - Ratio	37	4	1540	667	340	394	820	1755	667	340	394	917
CHHM3 - 6245DA - (B) - Ratio	2.2	4	1106	729	155	182	670	1169	729	155	182	676
CHHM4 - 6245DA - (B) - Ratio	3.0	4	1129	729	166	222	679	1201	729	166	222	689
CHHM5 - 6245DA - (B) - Ratio	3.7	4	1129	729	166	222	679	1201	729	166	222	689
CHHM8 - 6245DA - (B) - Ratio	5.5	4	1173	729	166	222	686	1245	729	166	222	696
CHHM10 - 6245DA - (B) - Ratio	7.5	4	1201	729	211	251	702	1296	729	211	251	719
CHHM15 - 6245DA - (B) - Ratio	11	4	1261	729	211	251	716	1356	729	211	251	733
CHHM20 - 6245DA - (B) - Ratio	15	4	1346	729	261	324	769	1451	729	261	324	803
CHHM25 - 6245DA - (B) - Ratio	18.5	4	1441	729	340	394	840	1606	729	340	394	891
CHHM30 - 6245DA - (B) - Ratio	22	4	1441	729	340	394	840	1606	729	340	394	891
CHHM15 - 6245DB - (B) - Ratio	11	4	1282	729	211	251	740	1377	729	211	251	758
CHHM20 - 6245DB - (B) - Ratio	15	4	1367	729	261	324	800	1472	729	261	324	834
CHHM25 - 6245DB - (B) - Ratio	18.5	4	1462	729	340	394	866	1627	729	340	394	917
CHHM30 - 6245DB - (B) - Ratio	22	4	1462	729	340	394	866	1627	729	340	394	917
CHHM40 - 6245DB - (B) - Ratio	30	4	1462	729	340	394	883	1627	729	340	394	926
CHHM50 - 6245DB - (B) - Ratio	37	4	1577	729	340	394	935	1792	729	340	394	1032

Note: 1. □ indicates motor capacity.
2. Dimension of shaft end diameter: Dimension tolerance conforms to JIS B 0401-1976 "h6."
3. Dimension of shaft end key: Dimension tolerance conforms to JIS B 1301-1996 "Parallel Key."

Dimension Tables Gearmotors (Horizontal Direction, Foot-Mount)

CHHM[ ]- 6255DA to 6275DA

Note: 1

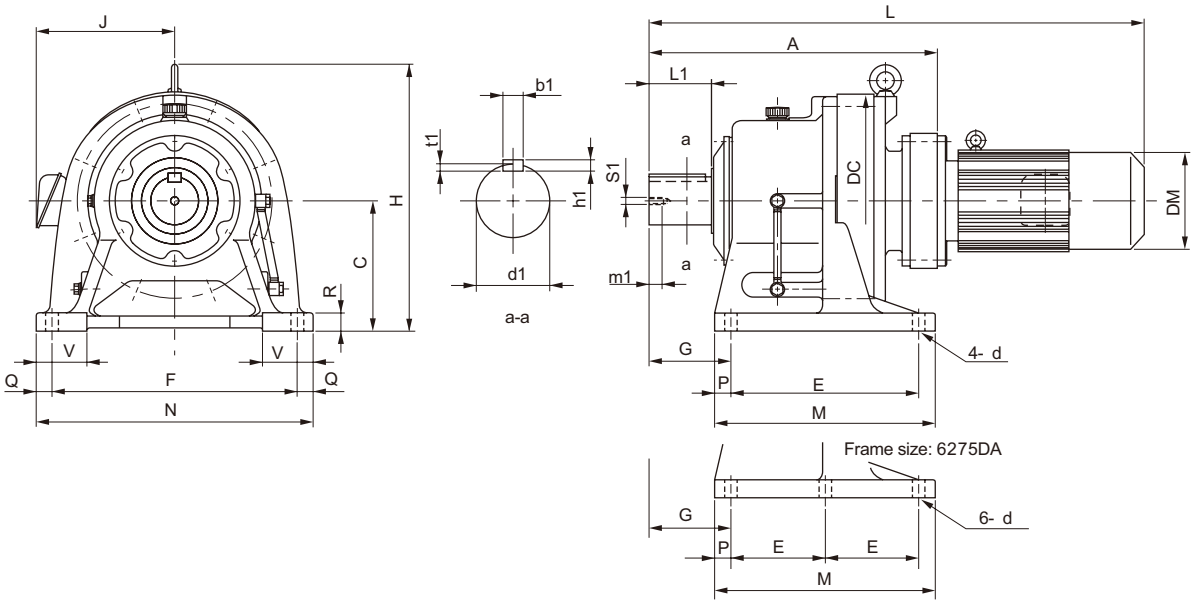

Frame size	A	C	DC	E	F	G	M	N	P	Q	R	V	d	Output Shaft Note: 2, 3, 5						
														d1	L1	b1	h1	t1	S1	m1
6255DA	956	375	670	520	670	320	630	780	55	55	50	140	39	160	240	40	22	13	M30	49
6255DB	978	375	670	520	670	320	630	780	55	55	50	140	39	160	240	40	22	13	M30	49
6265DA	1088	400	736	590	770	390	700	880	55	55	55	160	45	170	300	40	22	13	M30	49
6275DA	1349	540	950	420	1050	485	1040	1160	100	55	60	200	45	180	330	45	25	15	M30	52

Model Note: 4	Motor		Standard					With Brake				
	[kW]	[P]	L	H	J	DM	W [kg]	L	H	J	DM	W [kg]
CHHM5 - 6255DA - (B) - Ratio	3.7	4	1284	815	166	222	1031	1356	815	166	222	1041
CHHM8 - 6255DA - (B) - Ratio	5.5	4	1328	815	166	222	1041	1400	815	166	222	1051
CHHM10 - 6255DA - (B) - Ratio	7.5	4	1346	815	211	251	1056	1441	815	213	251	1071
CHHM15 - 6255DA - (B) - Ratio	11	4	1406	815	211	251	1071	1501	815	213	251	1086
CHHM20 - 6255DA - (B) - Ratio	15	4	1486	815	261	324	1121	1591	815	261	324	1157
CHHM25 - 6255DA - (B) - Ratio	18.5	4	1581	815	340	394	1195	1746	815	340	394	1246
CHHM30 - 6255DA - (B) - Ratio	22	4	1581	815	340	394	1195	1746	815	340	394	1246
CHHM40 - 6255DA - (B) - Ratio	30	4	1581	815	340	394	1215	1746	815	340	394	1258
CHHM15 - 6255DB - (B) - Ratio	11	4	1443	815	211	251	1144	1538	815	211	251	1159
CHHM20 - 6255DB - (B) - Ratio	15	4	1508	815	261	324	1194	1613	815	261	324	1228
CHHM25 - 6255DB - (B) - Ratio	18.5	4	1603	815	340	394	1270	1768	815	340	394	1321
CHHM30 - 6255DB - (B) - Ratio	22	4	1603	815	340	394	1270	1768	815	340	394	1321
CHHM40 - 6255DB - (B) - Ratio	30	4	1603	815	340	394	1285	1768	815	340	394	1328
CHHM50 - 6255DB - (B) - Ratio	37	4	1718	815	340	394	1323	1928	815	340	394	1420
CHHM60 - 6255DB - (B) - Ratio	45	4	1718	815	340	394	1323	1928	815	340	394	1420
CHHM8 - 6265DA - (B) - Ratio	5.5	4	1480	874	166	222	1366	1552	874	166	222	1376
CHHM10 - 6265DA - (B) - Ratio	7.5	4	1493	874	211	251	1381	1588	874	211	251	1401
CHHM15 - 6265DA - (B) - Ratio	11	4	1553	874	211	251	1396	1648	874	211	251	1411
CHHM20 - 6265DA - (B) - Ratio	15	4	1618	874	261	324	1446	1723	874	261	324	1482
CHHM25 - 6265DA - (B) - Ratio	18.5	4	1713	874	340	394	1525	1878	874	340	394	1570
CHHM30 - 6265DA - (B) - Ratio	22	4	1713	874	340	394	1525	1878	874	340	394	1570
CHHM40 - 6265DA - (B) - Ratio	30	4	1713	874	340	394	1540	1878	874	340	394	1583
CHHM50 - 6265DA - (B) - Ratio	37	4	1828	874	340	394	1575	2043	874	340	394	1672
CHHM60 - 6265DA - (B) - Ratio	45	4	1828	874	340	394	1575	2043	874	340	394	1672
CHHM10 - 6275DA - (B) - Ratio	7.5	4	1754	1161	211	251	2516	1849	1161	211	251	2536
CHHM15 - 6275DA - (B) - Ratio	11	4	1814	1161	211	251	2531	1909	1161	211	251	2546
CHHM20 - 6275DA - (B) - Ratio	15	4	1879	1161	261	324	2581	1984	1161	261	324	2617
CHHM25 - 6275DA - (B) - Ratio	18.5	4	1974	1161	340	394	2660	2139	1161	340	394	2705
CHHM30 - 6275DA - (B) - Ratio	22	4	1974	1161	340	394	2660	2139	1161	340	394	2705
CHHM40 - 6275DA - (B) - Ratio	30	4	1974	1161	340	394	2670	2139	1161	340	394	2718
CHHM50 - 6275DA - (B) - Ratio	37	4	2089	1161	340	394	2715	2304	1161	340	394	2810
CHHM60 - 6275DA - (B) - Ratio	45	4	2089	1161	340	394	2715	2304	1161	340	394	2810

Note: 4. "B" after the frame size indicates models equipped with brake.
5. Dimension of shaft end: Refer to pages F-28 to F-29 for details.
6. Dimensions in above drawings are subject to change without notice.

Dimension Tables Gearmotors (Universal Direction, Flange Mount)

CNFM[ ]Note: 1 - 606□ to 609□

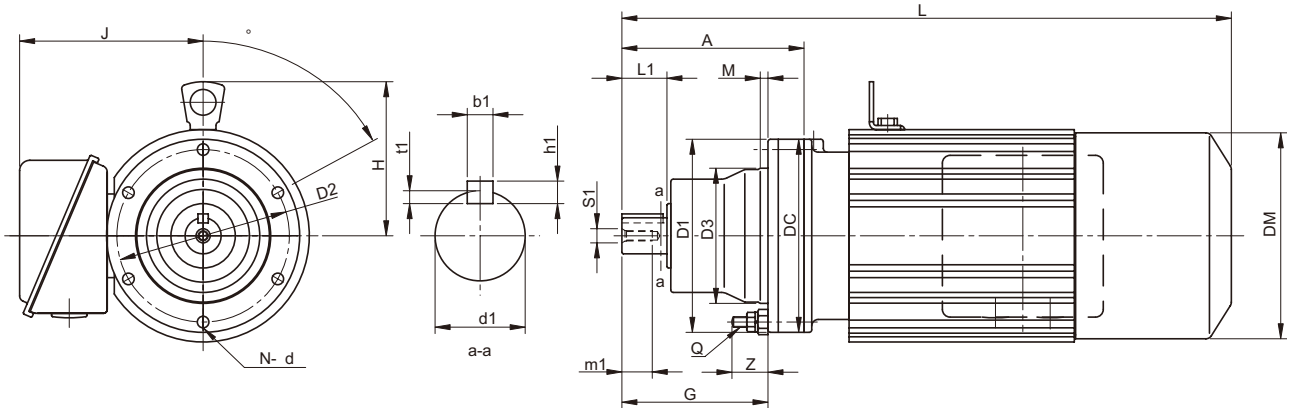

Frame size Note: 5	A	G	D1	D2	D3	DC	Q	Z	M	N	d	α°	Output Shaft Note: 2, 3, 7						
													d1	L1	b1	h1	t1	S1	m1
606□	92	68	110	98	80	110	M6	21	4	6	6.6	60	14	25	5	5	3	M5	16
607□	98	74	110	98	80	110	M6	21	4	6	6.6	60	18	30	6	6	3.5	M6	16
608□	129	91	134	118	95	134	M8	27	5	8	9	22.5	22	35	6	6	3.5	M6	16
609□	142	114	150	134	105	150	M8	28	6	8	9	22.5	28	35	8	7	4	M8	20

Model Note: 5, 6	Motor		Standard					With Brake				
	[kW]	[P]	L	H	J	DM	W [kg]	L	H	J	DM	W [kg]
CNFM01 - 606□ - (B) - Ratio	0.1	4	254	-	113	119	6.5	261	-	113	124	8
CNFM02 - 606□ - (B) - Ratio	0.2	4	272	-	113	124	7.5	300	-	113	124	9
CNFM03 - 606□ - (B) - Ratio	0.25	4	272	-	113	124	7.5	300	-	113	124	9
CNFM01 - 607□ - (B) - Ratio	0.1	4	260	-	113	119	7.5	267	-	113	124	8.5
CNFM02 - 607□ - (B) - Ratio	0.2	4	278	-	113	124	8.5	306	-	113	124	9.5
CNFM03 - 607□ - (B) - Ratio	0.25	4	278	-	113	124	8.5	306	-	113	124	9.5
CNFM05 - 607□ - (B) - Ratio	0.4	4	294	-	113	124	9.5	326	-	113	124	10.5
CNFM01 - 608□ - (B) - Ratio	0.1	4	286	-	113	119	10	293	-	113	124	11
CNFM02 - 608□ - (B) - Ratio	0.2	4	304	-	113	124	11	332	-	113	124	12
CNFM03 - 608□ - (B) - Ratio	0.25	4	304	-	113	124	11	332	-	113	124	12
CNFM05 - 608□ - (B) - Ratio	0.4	4	320	-	113	124	13	352	-	113	124	14
CNFM08 - 608□ - (B) - Ratio	0.55	4	361	113	143	160	17	404	113	143	160	18
CNFM1 - 608□ - (B) - Ratio	0.75	4	361	113	143	160	17	404	113	143	160	18
CNFM01 - 609□ - (B) - Ratio	0.1	4	304	-	113	119	11	311	-	113	124	13
CNFM02 - 609□ - (B) - Ratio	0.2	4	322	-	113	124	12	350	-	113	124	14
CNFM03 - 609□ - (B) - Ratio	0.25	4	322	-	113	124	12	350	-	113	124	14
CNFM05 - 609□ - (B) - Ratio	0.4	4	338	-	113	124	13	370	-	113	124	15
CNFM08 - 609□ - (B) - Ratio	0.55	4	379	113	143	160	17	422	113	143	160	19
CNFM1 - 609□ - (B) - Ratio	0.75	4	379	113	143	160	17	422	113	143	160	19
CNFM1H - 609□ - (B) - Ratio	1.1	4	412	120	148	169	21	474	120	148	169	25
CNFM2 - 609□ - (B) - Ratio	1.5	4	412	120	148	169	21	474	120	148	169	25

Note: 1. [ ] indicates motor capacity.
2. Dimension of shaft end diameter: Dimension tolerance conforms to JIS B 0401-1976 "h6."
3. Dimension of shaft end key: Dimension tolerance conforms to JIS B 1301-1996 "Parallel Key."
4. Pilot diameter (ϕD3): Dimension tolerance conforms to JIS B 0401-1976 "g6."

Dimension Tables Gearmotors (Universal Direction, Flange Mount)

CNFM□ (Note: 1) - 610□ to 612□

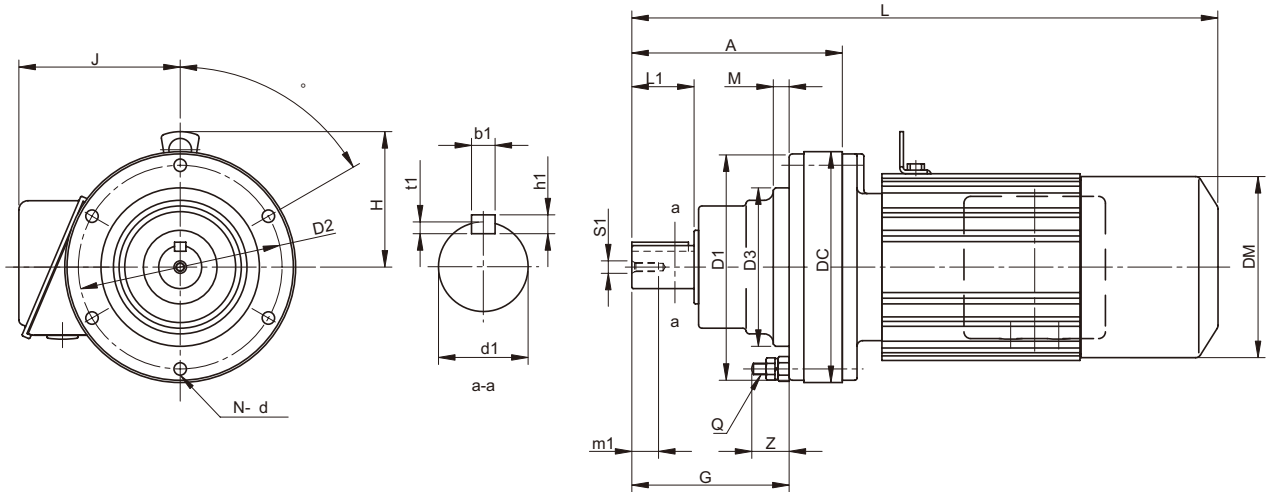

Frame size (Note: 5)	A	G	D1	D2	D3	DC	Q	Z	M	N	d	α°	Output Shaft (Note: 2, 3, 7) d1	L1	b1	h1	t1	S1	m1
610□	156	114	150	134	105	150	M8	28	6	8	9	22.5	28	35	8	7	4	M8	20
611□	170	118	162	146	115	162	M8	28	6	8	9	22.5	32	45	10	8	5	M8	20
612□	186	139	200	180	140	204	M10	33	14	6	11	60	38	55	10	8	5	M8	20

Model (Note: 5, 6)	Motor [kW]	[P]	Standard L	H	J	DM	W [kg]	With Brake L	H	J	DM	W [kg]
CNFM02 - 610□ - (B) - Ratio	0.2	4	336	-	113	124	14	364	-	113	124	16
CNFM03 - 610□ - (B) - Ratio	0.25	4	336	-	113	124	14	364	-	113	124	16
CNFM05 - 610□ - (B) - Ratio	0.4	4	352	-	113	124	15	384	-	113	124	17
CNFM08 - 610□ - (B) - Ratio	0.55	4	393	113	143	160	19	436	113	143	160	22
CNFM1 - 610□ - (B) - Ratio	0.75	4	393	113	143	160	19	436	113	143	160	22
CNFM1H - 610□ - (B) - Ratio	1.1	4	426	120	148	169	23	488	120	148	169	28
CNFM2 - 610□ - (B) - Ratio	1.5	4	426	120	148	169	23	488	120	148	169	28
CNFM3 - 610□ - (B) - Ratio	2.2	4	446	126	155	182	27	509	126	155	182	33
CNFM05 - 611□ - (B) - Ratio	0.4	4	363	-	113	124	17	394	-	113	124	18
CNFM08 - 611□ - (B) - Ratio	0.55	4	403	113	143	160	20	452	113	143	160	23
CNFM1 - 611□ - (B) - Ratio	0.75	4	403	113	143	160	20	452	113	143	160	23
CNFM1H - 611□ - (B) - Ratio	1.1	4	436	120	148	169	23	493	120	148	169	28
CNFM2 - 611□ - (B) - Ratio	1.5	4	436	120	148	169	23	493	120	148	169	28
CNFM3 - 611□ - (B) - Ratio	2.2	4	456	126	155	182	27	519	126	155	182	33
CNFM4 - 611□ - (B) - Ratio	3.0	4	491	146	166	222	37	563	146	166	222	47
CNFM5 - 611□ - (B) - Ratio	3.7	4	491	146	166	222	37	563	146	166	222	47
CNFM05 - 612□ - (B) - Ratio	0.4	4	387	113	113	124	26	419	113	113	124	28
CNFM08 - 612□ - (B) - Ratio	0.55	4	423	113	143	160	28	466	113	143	160	31
CNFM1 - 612□ - (B) - Ratio	0.75	4	423	113	143	160	28	466	113	143	160	31
CNFM1H - 612□ - (B) - Ratio	1.1	4	456	120	148	169	32	518	120	148	169	37
CNFM2 - 612□ - (B) - Ratio	1.5	4	456	120	148	169	32	518	120	148	169	37
CNFM3 - 612□ - (B) - Ratio	2.2	4	476	126	155	182	36	539	126	155	182	43
CNFM4 - 612□ - (B) - Ratio	3.0	4	499	146	166	222	46	571	146	166	222	56
CNFM5 - 612□ - (B) - Ratio	3.7	4	499	146	166	222	46	571	146	166	222	56
CNFM8 - 612□ - (B) - Ratio	5.5	4	543	146	166	222	53	615	146	166	222	63

Note: 5. □ indicates 0 or 5, expressing combination with reduction ratio. Refer to the Selection Table for details.
6. "B" after the frame size indicates models equipped with brake.
7. Dimension of shaft end: Refer to pages F-28 to F-29 for details.
8. Dimensions in above drawings are subject to change without notice.

Dimension Tables Gearmotors (Horizontal Direction, Flange Mount)

CHFM[Note: 1]- 613□ to 614□

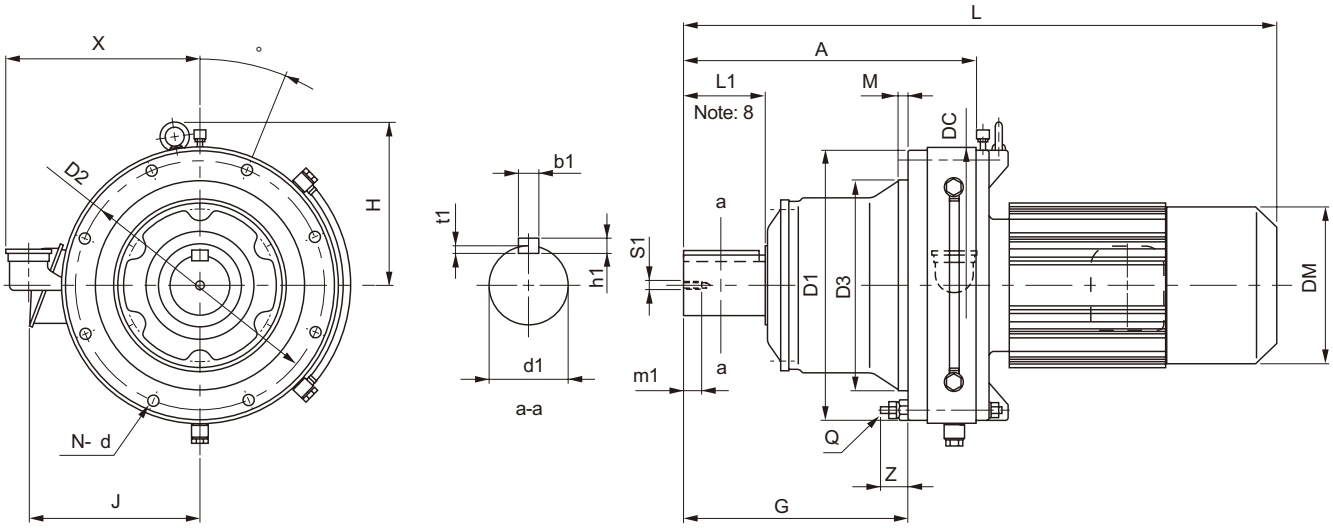

Frame size Note: 5	A	G	D1	D2	D3	DC	Q	Z	M	N	d	α°	X	Output Shaft Note: 2, 3, 7						
														d1	L1	b1	h1	t1	S1	m1
613□	240	178	226	205	165	230	M10	31	16	6	11	60	208	50	70	14	9	5.5	M10	18
614□	260	198	226	205	165	230	M10	31	16	6	11	60	208	50	90	14	9	5.5	M10	18

Model Note: 5, 6	Motor		Standard					With Brake				
	[kW]	[P]	L	H	J	DM	W [kg]	L	H	J	DM	W [kg]
CHFM08 - 613□ - (B) - Ratio	0.55	4	477	111	143	160	44	520	111	143	160	46
CHFM1 - 613□ - (B) - Ratio	0.75	4	477	111	143	160	44	520	111	143	160	47
CHFM1H - 613□ - (B) - Ratio	1.1	4	510	118	148	169	48	572	118	148	169	53
CHFM2 - 613□ - (B) - Ratio	1.5	4	510	118	148	169	48	572	118	148	169	53
CHFM3 - 613□ - (B) - Ratio	2.2	4	530	124	155	182	51	593	124	155	182	58
CHFM4 - 613□ - (B) - Ratio	3.0	4	553	146	166	222	61	625	146	166	222	71
CHFM5 - 613□ - (B) - Ratio	3.7	4	553	146	166	222	61	625	146	166	222	71
CHFM8 - 613□ - (B) - Ratio	5.5	4	597	146	166	222	68	669	146	166	222	78
CHFM10 - 613□ - (B) - Ratio	7.5	4	620	173	211	251	83	715	173	211	251	101
CHFM15 - 613□ - (B) - Ratio	11	4	680	173	211	251	97	775	173	211	251	115
CHFM1 - 614□ - (B) - Ratio	0.75	4	497	118	143	160	45	540	118	143	160	48
CHFM1H - 614□ - (B) - Ratio	1.1	4	530	118	148	169	49	592	118	148	169	54
CHFM2 - 614□ - (B) - Ratio	1.5	4	530	118	148	169	49	592	118	148	169	54
CHFM3 - 614□ - (B) - Ratio	2.2	4	550	124	155	182	52	613	124	155	182	59
CHFM4 - 614□ - (B) - Ratio	3.0	4	573	146	166	222	62	645	146	166	222	72
CHFM5 - 614□ - (B) - Ratio	3.7	4	573	146	166	222	62	645	146	166	222	72
CHFM8 - 614□ - (B) - Ratio	5.5	4	617	146	166	222	69	689	146	166	222	79
CHFM10 - 614□ - (B) - Ratio	7.5	4	640	173	211	251	84	735	173	211	251	102
CHFM15 - 614□ - (B) - Ratio	11	4	700	173	211	251	98	795	173	211	251	116
CHFM20 - 614□ - (B) - Ratio	15	4	790	208	261	324	150	895	208	261	324	184

Note: 1. ⬚ indicates motor capacity.
2. Dimension of shaft end diameter: Dimension tolerance conforms to JIS B 0401-1976 "h6."
3. Dimension of shaft end key: Dimension tolerance conforms to JIS B 1301-1996 "Parallel Key."
4. Pilot diameter (ϕD3): Dimension tolerance conforms to JIS B 0401-1976 "g6."

Dimension Tables Gearmotors (Horizontal Direction, Flange Mount)

CHFM□ Note: 1 - 616□ to 617□

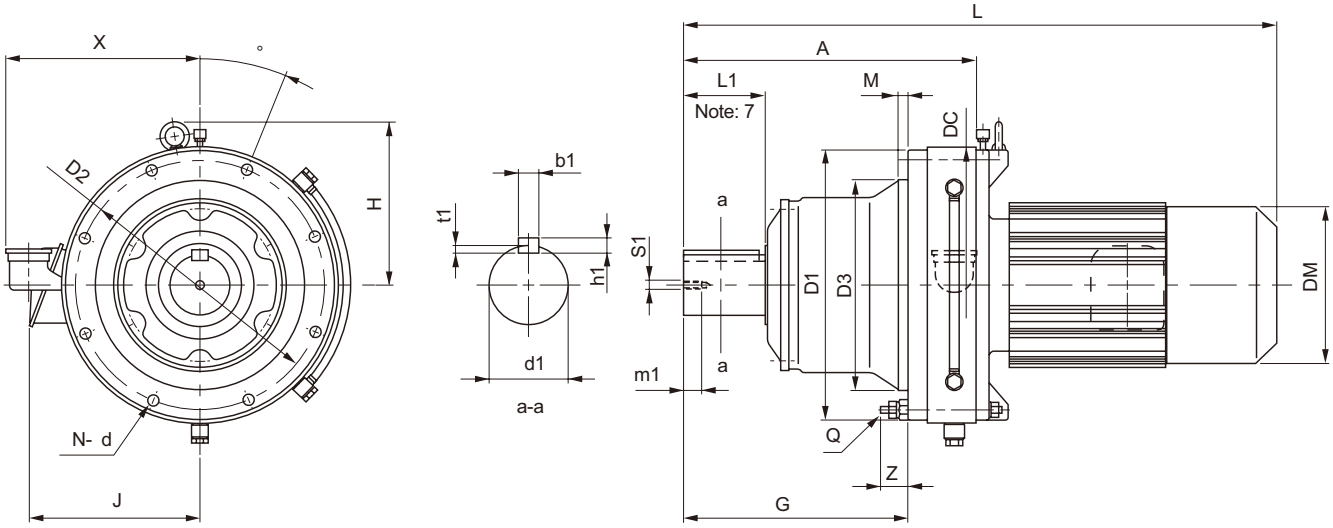

Frame size Note: 5	A	G	D1	D2	D3	DC	Q	Z	M	N	d	α°	X	Output Shaft Note: 2, 3, 7						
														d1	L1	b1	h1	t1	S1	m1
616□	308	222	296	270	200	300	M12	35	10	6	14	30	228	60	90	18	11	7	M10	18
617□	352	262	330	300	250	340	M12	41	12	8	14	22.5	243	70	90	20	12	7.5	M12	24

Model Note: 5, 6	Motor		Standard					With Brake				
	[kW]	[P]	L	H	J	DM	W [kg]	L	H	J	DM	W [kg]
CHFM1H - 616□ - (B) - Ratio	1.1	4	583	118	148	169	76	645	118	148	169	81
CHFM2 - 616□ - (B) - Ratio	1.5	4	583	118	148	169	76	645	118	148	169	81
CHFM3 - 616□ - (B) - Ratio	2.2	4	598	124	155	182	79	661	124	155	182	85
CHFM4 - 616□ - (B) - Ratio	3.0	4	621	146	166	222	88	693	146	166	222	98
CHFM5 - 616□ - (B) - Ratio	3.7	4	621	146	166	222	88	693	146	166	222	98
CHFM8 - 616□ - (B) - Ratio	5.5	4	665	146	166	222	95	737	146	166	222	105
CHFM10 - 616□ - (B) - Ratio	7.5	4	693	173	211	251	111	788	173	211	251	128
CHFM15 - 616□ - (B) - Ratio	11	4	753	173	211	251	125	848	173	211	251	142
CHFM20 - 616□ - (B) - Ratio	15	4	838	208	261	324	178	943	208	261	324	212
CHFM25 - 616□ - (B) - Ratio	18.5	4	933	208	340	394	254	1098	208	340	394	305
CHFM30 - 616□ - (B) - Ratio	22	4	933	208	340	394	254	1098	208	340	394	305
CHFM4 - 617□ - (B) - Ratio	3.0	4	680	203	166	222	119	752	203	166	222	129
CHFM5 - 617□ - (B) - Ratio	3.7	4	680	203	166	222	119	752	203	166	222	129
CHFM8 - 617□ - (B) - Ratio	5.5	4	724	203	166	222	126	796	203	166	222	136
CHFM10 - 617□ - (B) - Ratio	7.5	4	742	203	211	251	141	837	203	211	251	159
CHFM15 - 617□ - (B) - Ratio	11	4	802	203	211	251	155	897	203	211	251	173
CHFM20 - 617□ - (B) - Ratio	15	4	882	213	261	324	209	987	213	261	324	243
CHFM25 - 617□ - (B) - Ratio	18.5	4	977	227	340	394	281	1142	227	340	394	332
CHFM30 - 617□ - (B) - Ratio	22	4	977	227	340	394	281	1142	227	340	394	332
CHFM40 - 617□ - (B) - Ratio	30	4	977	228	340	394	298	1142	228	340	394	341

Note: 5. □ indicates 0 or 5, expressing combination with reduction ratio. Refer to the Selection Table for details.
6. "B" after the frame size indicates models equipped with brake.
7. Dimension of shaft end: Refer to pages F-28 to F-29 for details.
8. Dimensions in above drawings are subject to change without notice.

Dimension Tables Gearmotors (Horizontal Direction, Flange Mount)

CHFM□ Note: 1 - 618□ to 619□

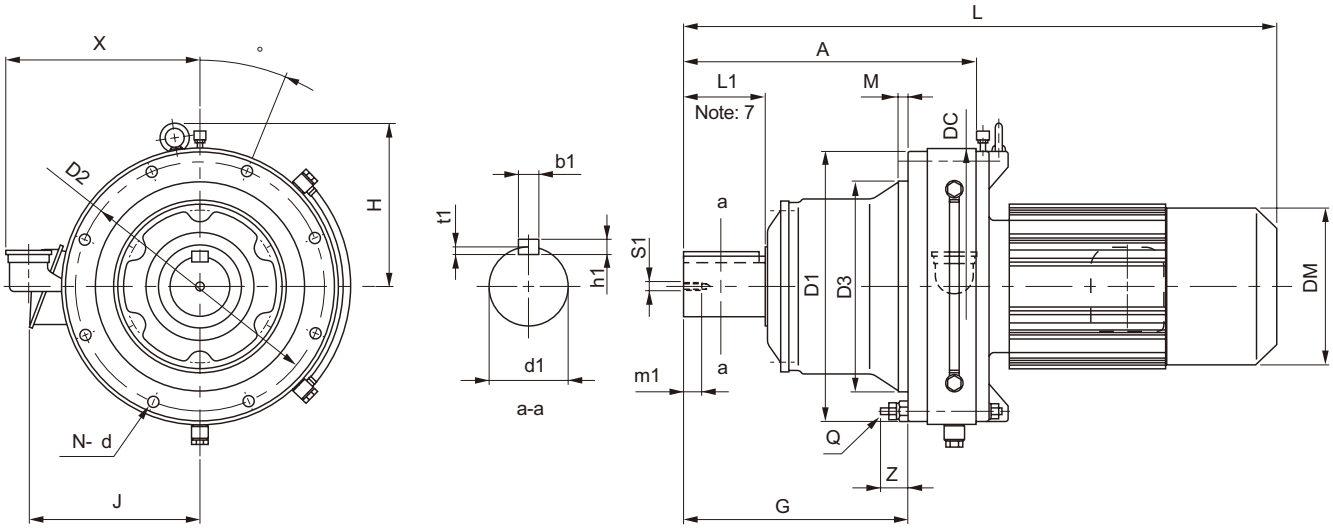

Frame size Note: 5	A	G	D1	D2	D3	DC	Q	Z	M	N	d	α°	X	Output Shaft Note: 2, 3, 7						
														d1	L1	b1	h1	t1	S1	m1
618□	389	299	360	330	280	370	M12	38	12	8	14	22.5	258	80	110	22	14	9	M12	24
619□	465	365	420	380	320	430	M12	41	10	12	14	15	285	95	135	25	14	9	M20	34

Model Note: 5, 6	Motor		Standard					With Brake				
	[kW]	[P]	L	H	J	DM	W [kg]	L	H	J	DM	W [kg]
CHFM4 - 618□ - (B) - Ratio	3.0	4	717	218	166	222	149	789	218	166	222	159
CHFM5 - 618□ - (B) - Ratio	3.7	4	717	218	166	222	149	789	218	166	222	159
CHFM8 - 618□ - (B) - Ratio	5.5	4	761	218	166	222	157	833	218	166	222	167
CHFM10 - 618□ - (B) - Ratio	7.5	4	779	218	211	251	172	874	218	211	251	190
CHFM15 - 618□ - (B) - Ratio	11	4	839	218	211	251	186	934	218	211	251	204
CHFM20 - 618□ - (B) - Ratio	15	4	919	217	261	324	246	1024	217	261	324	275
CHFM25 - 618□ - (B) - Ratio	18.5	4	1014	227	340	394	312	1179	227	340	394	363
CHFM30 - 618□ - (B) - Ratio	22	4	1014	227	340	394	312	1179	227	340	394	363
CHFM40 - 618□ - (B) - Ratio	30	4	1014	228	340	394	329	1179	228	340	394	372
CHFM50 - 618□ - (B) - Ratio	37	4	1129	228	340	394	377	1344	228	340	394	474
CHFM60 - 618□ - (B) - Ratio	45	4	1129	228	340	394	377	1344	228	340	394	474
CHFM8 - 619□ - (B) - Ratio	5.5	4	857	261	166	222	217	929	261	166	222	227
CHFM10 - 619□ - (B) - Ratio	7.5	4	870	261	211	251	230	965	261	211	251	248
CHFM15 - 619□ - (B) - Ratio	11	4	930	261	211	251	244	1025	261	211	251	262
CHFM20 - 619□ - (B) - Ratio	15	4	995	217	261	324	297	1100	217	261	324	332
CHFM25 - 619□ - (B) - Ratio	18.5	4	1090	227	340	394	373	1255	227	340	394	418
CHFM256 - 619□ - (B) - Ratio	18.5	6	1090	227	340	394	388	1255	227	340	394	431
CHFM30 - 619□ - (B) - Ratio	22	4	1090	227	340	394	373	1255	227	340	394	418
CHFM40 - 619□ - (B) - Ratio	30	4	1090	261	340	394	388	1255	261	340	394	431
CHFM406 - 619□ - (B) - Ratio	30	6	1205	261	340	394	426	1420	261	340	394	523
CHFM50 - 619□ - (B) - Ratio	37	4	1205	261	340	394	426	1420	261	340	394	523
CHFM506 - 619□ - (B) - Ratio	37	6	1205	261	340	394	426	1420	261	340	394	523
CHFM60 - 619□ - (B) - Ratio	45	4	1205	261	340	394	426	1420	261	340	394	523

Note: 1. ⬚ indicates motor capacity.
2. Dimension of shaft end diameter: Dimension tolerance conforms to JIS B 0401-1976 "h6."
3. Dimension of shaft end key: Dimension tolerance conforms to JIS B 1301-1996 "Parallel Key."
4. Pilot diameter (ϕD3): Dimension tolerance conforms to JIS B 0401-1976 "g6."

Dimension Tables Gearmotors (Horizontal Direction, Flange Mount)

CHFM□ - 6205 to 6215 (Note: 1)

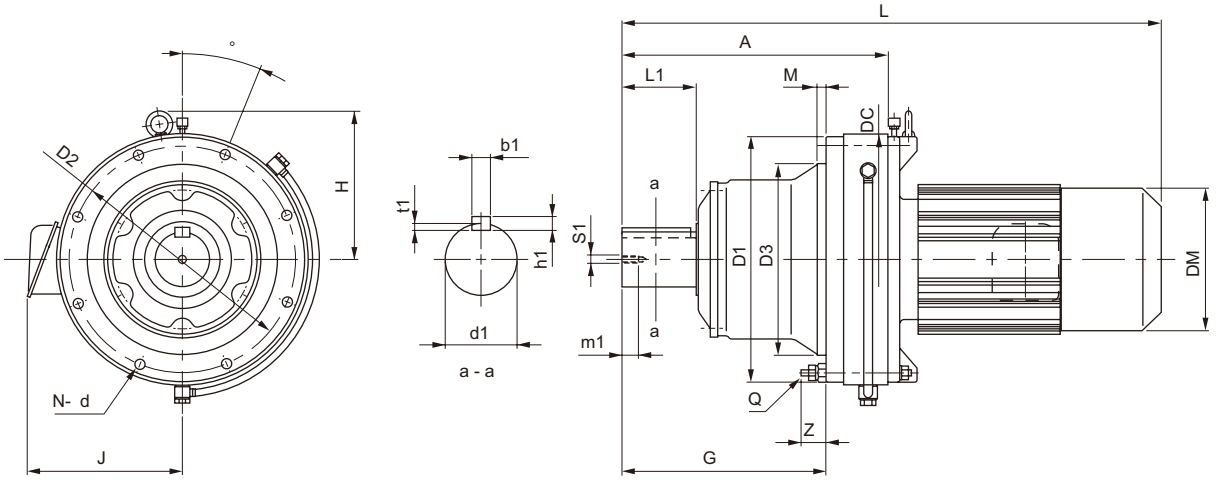

Frame size Note: 5	A	G	D1	D2	D3	DC	Q	Z	M	N	d	α°	Output Shaft Note: 2, 3, 7						
													d1	L1	b1	h1	t1	S1	m1
6205	502	410	443	405	360	448	M16	57	20	12	18	15	100	165	28	16	10	M20	34
6215	526	423	480	440	390	485	M18	57	20	12	20.5	15	110	165	28	16	10	M20	34

Model Note: 5, 6	Motor		Standard					With Brake				
	[kW]	[P]	L	H	J	DM	W [kg]	L	H	J	DM	W [kg]
CHFM15 - 6205 - (B) - Ratio	11	4	972	283	211	251	270	1067	283	211	251	288
CHFM20 - 6205 - (B) - Ratio	15	4	1042	283	261	324	324	1147	283	261	324	360
CHFM206 - 6205 - (B) - Ratio	15	6	1127	283	340	394	399	1292	283	340	394	444
CHFM25 - 6205 - (B) - Ratio	18.5	4	1127	283	340	394	399	1292	283	340	394	444
CHFM30 - 6205 - (B) - Ratio	22	4	1127	283	340	394	399	1292	283	340	394	444
CHFM306 - 6205 - (B) - Ratio	22	6	1127	283	340	394	412	1292	283	340	394	457
CHFM40 - 6205 - (B) - Ratio	30	4	1127	283	340	394	412	1292	283	340	394	457
CHFM406 - 6205 - (B) - Ratio	30	6	1242	283	340	394	450	1457	283	340	394	544
CHFM50 - 6205 - (B) - Ratio	37	4	1242	283	340	394	450	1457	283	340	394	544
CHFM506 - 6205 - (B) - Ratio	37	6	1242	283	340	394	450	1457	283	340	394	544
CHFM60 - 6205 - (B) - Ratio	45	4	1242	283	340	394	450	1457	283	340	394	544
CHFM606 - 6205 - (B) - Ratio	45	6	1297	283	390	484	543	-	283	-	-	-
CHFM75 - 6205 - (B) - Ratio	55	4	1297	283	390	484	543	-	283	-	-	-
CHFM15 - 6215 - (B) - Ratio	11	4	996	312	211	251	350	1091	312	211	251	368
CHFM20 - 6215 - (B) - Ratio	15	4	1066	312	261	324	405	1171	312	261	324	440
CHFM206 - 6215 - (B) - Ratio	15	6	1151	312	340	394	474	1316	312	340	394	519
CHFM25 - 6215 - (B) - Ratio	18.5	4	1151	312	340	394	474	1316	312	340	394	519
CHFM256 - 6215 - (B) - Ratio	18.5	6	1151	312	340	394	487	1316	312	340	394	532
CHFM30 - 6215 - (B) - Ratio	22	4	1151	312	340	394	474	1316	312	340	394	519
CHFM306 - 6215 - (B) - Ratio	22	6	1151	312	340	394	487	1316	312	340	394	532
CHFM40 - 6215 - (B) - Ratio	30	4	1151	312	340	394	487	1316	312	340	394	532
CHFM406 - 6215 - (B) - Ratio	30	6	1266	312	340	394	525	1481	312	340	394	620
CHFM50 - 6215 - (B) - Ratio	37	4	1266	312	340	394	525	1481	312	340	394	620
CHFM506 - 6215 - (B) - Ratio	37	6	1266	312	340	394	525	1481	312	340	394	620
CHFM60 - 6215 - (B) - Ratio	45	4	1266	312	340	394	525	1481	312	340	394	620
CHFM606 - 6215 - (B) - Ratio	45	6	1321	312	390	484	635	-	312	-	-	-
CHFM75 - 6215 - (B) - Ratio	55	4	1321	312	390	484	635	-	312	-	-	-

Note: 5. □ indicates 0 or 5, expressing combination with reduction ratio. Refer to the Selection Table for details.
6. "B" after the frame size indicates models equipped with brake.
7. Dimension of shaft end: Refer to pages F-28 to F-29 for details.
8. Dimensions in above drawings are subject to change without notice.

Dimension Tables Gearmotors (Horizontal Direction, Flange Mount)

CHFM□ - 6225 to 6235 Note: 1

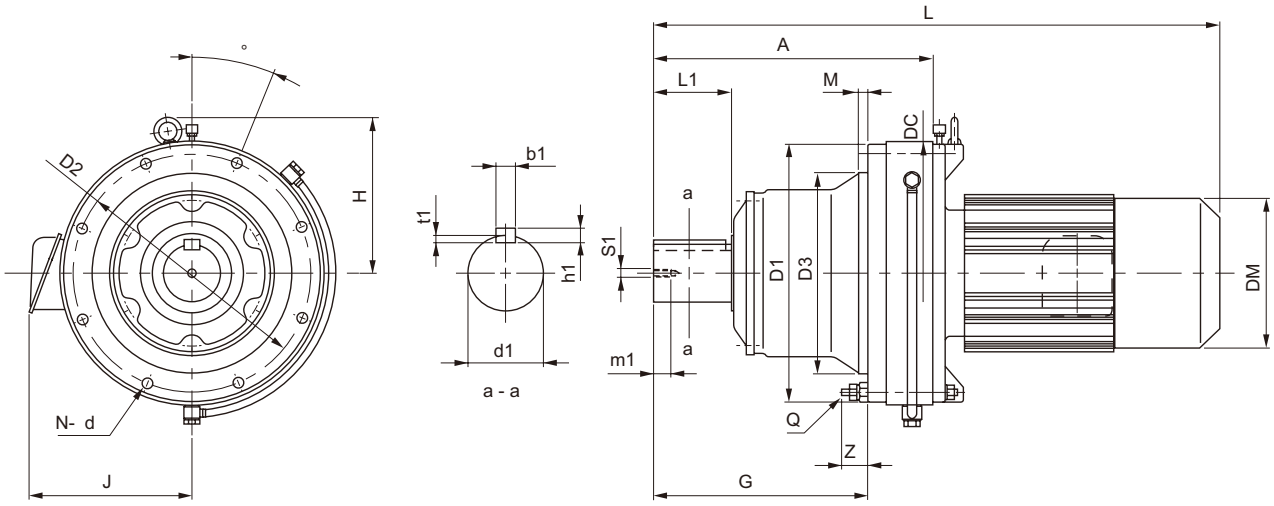

Frame size Note: 5	A	G	D1	D2	D3	DC	Q	Z	M	N	d	α°	Output Shaft Note: 2, 3, 7						
													d1	L1	b1	h1	t1	S1	m1
6225	566	454	521	475	420	526	M20	60	20	12	22	15	120	165	32	18	11	M20	34
6235	628	505	557	510	455	562	M20	63	20	12	22	15	130	200	32	18	11	M24	41

Model Note: 5, 6	Motor		Standard					With Brake				
	[kW]	[P]	L	H	J	DM	W [kg]	L	H	J	DM	W [kg]
CHFM206 - 6225 - (B) - Ratio	15	6	1191	333	340	394	542	1356	333	340	394	587
CHFM25 - 6225 - (B) - Ratio	18.5	4	1191	333	340	394	542	1356	333	340	394	587
CHFM256 - 6225 - (B) - Ratio	18.5	6	1191	333	340	394	555	1356	333	340	394	600
CHFM30 - 6225 - (B) - Ratio	22	4	1191	333	340	394	542	1356	333	340	394	587
CHFM306 - 6225 - (B) - Ratio	22	6	1191	333	340	394	555	1356	333	340	394	600
CHFM40 - 6225 - (B) - Ratio	30	4	1191	333	340	394	555	1356	333	340	394	600
CHFM406 - 6225 - (B) - Ratio	30	6	1306	333	340	394	593	1521	333	340	394	688
CHFM50 - 6225 - (B) - Ratio	37	4	1306	333	340	394	593	1521	333	340	394	688
CHFM506 - 6225 - (B) - Ratio	37	6	1306	333	340	394	593	1521	333	340	394	688
CHFM60 - 6225 - (B) - Ratio	45	4	1306	333	340	394	593	1521	333	340	394	688
CHFM606 - 6225 - (B) - Ratio	45	6	1361	333	390	484	692	-	-	-	-	-
CHFM75 - 6225 - (B) - Ratio	55	4	1361	333	390	484	692	-	-	-	-	-
CHFM206 - 6235 - (B) - Ratio	15	6	1253	351	340	394	627	1418	351	340	394	658
CHFM256 - 6235 - (B) - Ratio	18.5	6	1253	351	340	394	627	1418	351	340	394	672
CHFM306 - 6235 - (B) - Ratio	22	6	1253	351	340	394	627	1418	351	340	394	672
CHFM406 - 6235 - (B) - Ratio	30	6	1368	351	340	394	673	1583	351	340	394	761
CHFM506 - 6235 - (B) - Ratio	37	6	1368	351	340	394	673	1583	351	340	394	761
CHFM606 - 6235 - (B) - Ratio	45	6	1423	351	390	484	762	-	-	-	-	-
CHFM756 - 6235 - (B) - Ratio	55	6	1503	351	390	485	816	-	-	-	-	-

Note: 1. □ indicates motor capacity.
2. Dimension of shaft end diameter: Dimension tolerance conforms to JIS B 0401-1976 "h6."
3. Dimension of shaft end key: Dimension tolerance conforms to JIS B 1301-1996 "Parallel Key."
4. Pilot diameter (ϕD3): Dimension tolerance conforms to JIS B 0401-1976 "g6."

Dimension Tables Gearmotors (Horizontal Direction, Flange Mount)

CHFM[ ]- 6245 to 6265 (Note: 1)

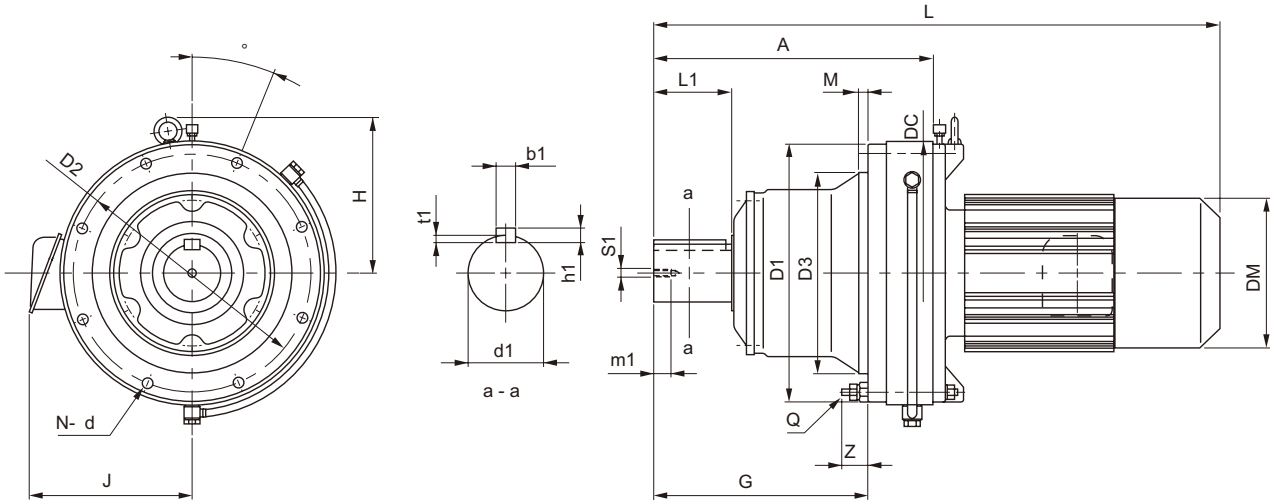

Frame size (Note: 5)	A	G	D1	D2	D3	DC	Q	Z	M	N	d	α°	Output Shaft (Note: 2, 3, 7) d1	L1	b1	h1	t1	S1	m1
6245	657	529	615	560	500	614	M24	65	25	12	27	15	140	200	36	20	12	M24	41
6255	775	616	666	610	540	670	M24	86	30	12	27	15	160	240	40	22	13	M30	49
6265	892	712	730	660	570	736	M30	82	40	12	34	15	170	300	40	22	13	M30	49

Model (Note: 5, 6)	Motor [kW]	Motor [P]	Standard L	Standard H	Standard J	Standard DM	Standard W [kg]	With Brake L	With Brake H	With Brake J	With Brake DM	With Brake W [kg]
CHFM206 - 6245 - (B) - Ratio	15	6	1282	359	340	394	747	1447	359	340	394	780
CHFM256 - 6245 - (B) - Ratio	18.5	6	1282	359	340	394	747	1447	359	340	394	794
CHFM306 - 6245 - (B) - Ratio	22	6	1282	359	340	394	747	1447	359	340	394	794
CHFM406 - 6245 - (B) - Ratio	30	6	1397	359	340	394	793	1612	359	340	394	881
CHFM506 - 6245 - (B) - Ratio	37	6	1397	359	340	394	793	1612	359	340	394	881
CHFM606 - 6245 - (B) - Ratio	45	6	1452	359	390	484	884	-	359	-	-	-
CHFM756 - 6245 - (B) - Ratio	55	6	1532	359	390	485	933	-	359	-	-	-
CHFM256 - 6255 - (B) - Ratio	18.5	6	1400	386	340	394	992	1565	386	340	394	1039
CHFM306 - 6255 - (B) - Ratio	22	6	1400	386	340	394	992	1565	386	340	394	1039
CHFM406 - 6255 - (B) - Ratio	30	6	1515	386	340	394	1037	1730	386	340	394	1125
CHFM506 - 6255 - (B) - Ratio	37	6	1515	386	340	394	1037	1730	386	340	394	1125
CHFM606 - 6255 - (B) - Ratio	45	6	1570	386	390	484	1117	-	-	-	-	-
CHFM756 - 6255 - (B) - Ratio	55	6	1650	386	390	485	1172	-	-	-	-	-
CHFM306 - 6265 - (B) - Ratio	22	6	1517	453	340	394	1230	1727	453	340	394	1277
CHFM406 - 6265 - (B) - Ratio	30	6	1632	453	340	394	1275	1847	453	340	394	1363
CHFM506 - 6265 - (B) - Ratio	37	6	1632	453	340	394	1275	1847	453	340	394	1363
CHFM606 - 6265 - (B) - Ratio	45	6	1687	453	390	484	1370	-	-	-	-	-

Note: 5. "B" after the frame size indicates models equipped with brake.
6. Dimension of shaft end: Refer to pages F-28 to F-29 for details.
7. Dimensions in above drawings are subject to change without notice.

Dimension Tables Gearmotors (Universal Direction, Flange Mount)

CNFM□ Note: 1 - 606□DA to 612□DB

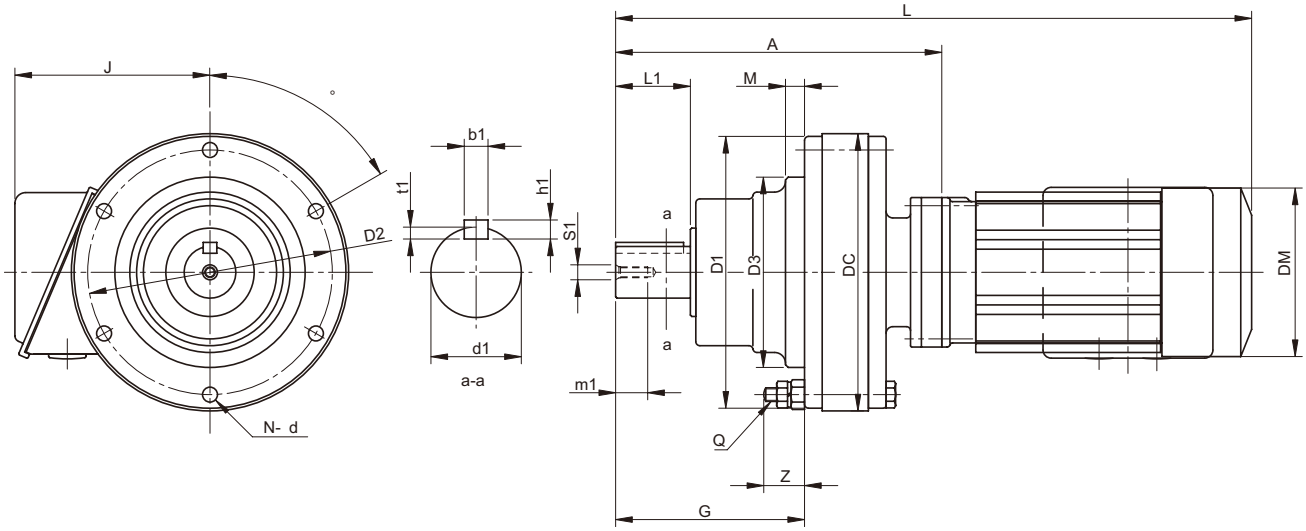

Frame size Note: 5	A	G	D1	D2	D3	DC	Q	Z	M	N	d	α°	Output Shaft Note: 2, 3, 7						
													d1	L1	b1	h1	t1	S1	m1
606□DA	125	68	110	98	80	110	M6	23	4	6	6.6	60	14	25	5	5	3	M5	16
607□DA	131	74	110	98	80	110	M6	23	4	6	6.6	60	18	30	6	6	3.5	M6	16
609□DA	190	114	150	134	105	150	M8	28	6	8	9	22.5	28	35	8	7	4	M8	20
610□DA	204	114	150	134	105	150	M8	28	6	8	9	22.5	28	35	8	7	4	M8	20
612□DA	240	139	200	180	140	204	M10	33	14	6	11	60	38	55	10	8	5	M8	20
612□DB	252	139	200	180	140	204	M10	33	14	6	11	60	38	55	10	8	5	M8	20

Model Note: 5, 6	Motor		Standard				With Brake			
	[kW]	[P]	L	J	DM	W [kg]	L	J	DM	W [kg]
CNFM01 - 606□DA - (B) - Ratio	0.1	4	287	113	119	8	294	113	124	9.5
CNFM01 - 607□DA - (B) - Ratio	0.1	4	293	113	119	9	300	113	124	10.5
CNFM02 - 607□DA - (B) - Ratio	0.2	4	311	113	124	10	339	113	124	12
CNFM01 - 609□DA - (B) - Ratio	0.1	4	352	113	119	14	359	113	124	15
CNFM02 - 609□DA - (B) - Ratio	0.2	4	370	113	124	15	398	113	124	16
CNFM03 - 609□DA - (B) - Ratio	0.25	4	370	113	124	15	398	113	124	16
CNFM05 - 609□DA - (B) - Ratio	0.4	4	386	113	124	16	418	113	124	17
CNFM01 - 610□DA - (B) - Ratio	0.1	4	366	113	119	15	373	113	124	16
CNFM02 - 610□DA - (B) - Ratio	0.2	4	384	113	124	16	412	113	124	17
CNFM03 - 610□DA - (B) - Ratio	0.25	4	384	113	124	16	412	113	124	17
CNFM05 - 610□DA - (B) - Ratio	0.4	4	400	113	124	17	432	113	124	18
CNFM01 - 612□DA - (B) - Ratio	0.1	4	402	113	119	26	409	113	124	27
CNFM02 - 612□DA - (B) - Ratio	0.2	4	420	113	124	27	448	113	124	28
CNFM03 - 612□DA - (B) - Ratio	0.25	4	420	113	124	27	448	113	124	28
CNFM05 - 612□DA - (B) - Ratio	0.4	4	436	113	124	28	468	113	124	29
CNFM01 - 612□DB - (B) - Ratio	0.1	4	414	113	119	29	421	113	124	31
CNFM02 - 612□DB - (B) - Ratio	0.2	4	432	113	124	30	473	113	124	32
CNFM03 - 612□DB - (B) - Ratio	0.25	4	432	113	124	30	473	113	124	32
CNFM05 - 612□DB - (B) - Ratio	0.4	4	448	113	124	31	473	113	124	33
CNFM08 - 612□DB - (B) - Ratio	0.55	4	489	143	160	35	532	143	160	38
CNFM1 - 612□DB - (B) - Ratio	0.75	4	489	143	160	35	532	143	160	38
CNFM1H - 612□DB - (B) - Ratio	1.1	4	516	148	169	39	578	148	169	44
CNFM2 - 612□DB - (B) - Ratio	1.5	4	516	148	169	39	578	148	169	44

Note: 1. □ indicates motor capacity.
2. Dimension of shaft end diameter: Dimension tolerance conforms to JIS B 0401-1976 "h6."
3. Dimension of shaft end key: Dimension tolerance conforms to JIS B 1301-1996 "Parallel Key."
4. Pilot diameter (ϕD3): Dimension tolerance conforms to JIS B 0401-1976 "g6."

Dimension Tables Gearmotors (Horizontal Direction, Flange Mount)

CHFM□ Note: 1 - 613□DA to 614□DC

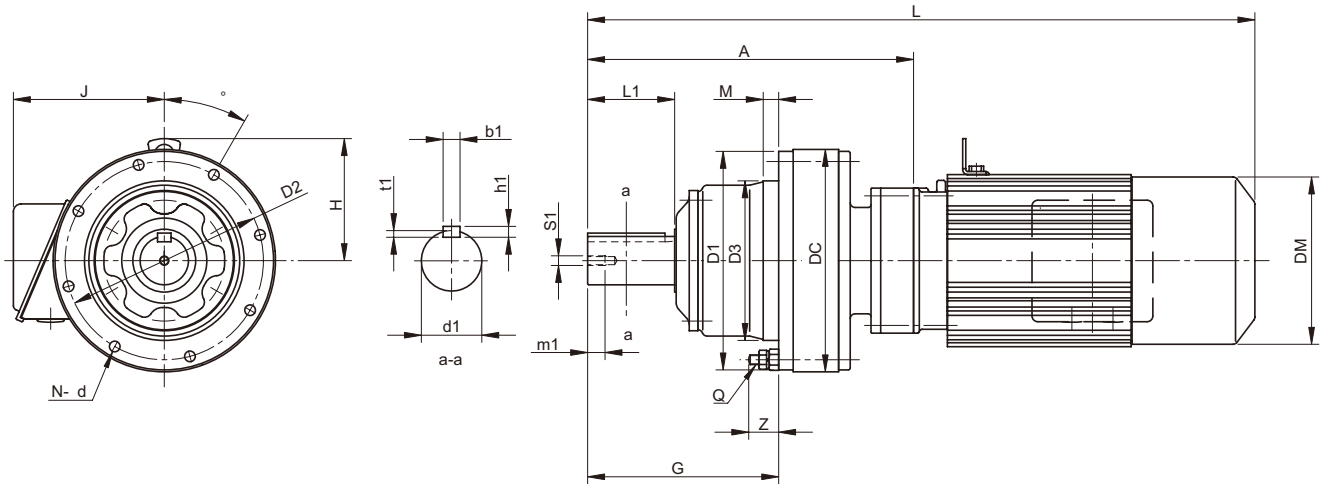

Frame size Note: 5	A	G	D1	D2	D3	DC	H	Q	Z	M	N	d	α°	Output Shaft Note: 2, 3, 7						
														d1	L1	b1	h1	t1	S1	m1
613□DA	294	178	226	205	165	230	150	M10	31	16	6	11	60	50	70	14	9	5.5	M10	18
613□DB	303	178	226	205	165	230	150	M10	31	16	6	11	60	50	70	14	9	5.5	M10	18
613□DC	317	178	226	205	165	230	150	M10	31	16	6	11	60	50	70	14	9	5.5	M10	18
614□DA	314	198	226	205	165	230	150	M10	31	16	6	11	60	50	90	14	9	5.5	M10	18
614□DB	323	198	226	205	165	230	150	M10	31	16	6	11	60	50	90	14	9	5.5	M10	18
614□DC	337	198	226	205	165	230	150	M10	31	16	6	11	60	50	90	14	9	5.5	M10	18

Model Note: 5, 6	Motor		Standard				With Brake			
	[kW]	[P]	L	J	DM	W [kg]	L	J	DM	W [kg]
CHFM02 - 613□DA - (B) - Ratio	0.2	4	474	113	124	40	502	113	124	41
CHFM03 - 613□DA - (B) - Ratio	0.25	4	474	113	124	40	522	113	124	41
CHFM05 - 613□DA - (B) - Ratio	0.4	4	490	113	124	41	522	113	124	42
CHFM02 - 613□DB - (B) - Ratio	0.2	4	483	113	124	42	511	113	124	44
CHFM03 - 613□DB - (B) - Ratio	0.25	4	483	113	124	42	511	113	124	44
CHFM05 - 613□DB - (B) - Ratio	0.4	4	499	113	124	43	531	113	124	45
CHFM08 - 613□DB - (B) - Ratio	0.55	4	540	143	160	47	583	143	160	50
CHFM1 - 613□DB - (B) - Ratio	0.75	4	540	143	160	47	583	143	160	50
CHFM1H - 613□DB - (B) - Ratio	1.1	4	573	148	169	51	635	148	169	56
CHFM2 - 613□DB - (B) - Ratio	1.5	4	573	148	169	51	635	148	169	56
CHFM08 - 613□DC - (B) - Ratio	0.55	4	554	143	160	49	597	143	160	52
CHFM1 - 613□DC - (B) - Ratio	0.75	4	554	143	160	49	597	143	160	52
CHFM2 - 613□DC - (B) - Ratio	1.5	4	587	148	169	53	649	148	169	58
CHFM3 - 613□DC - (B) - Ratio	2.2	4	607	155	182	57	670	155	182	63
CHFM02 - 614□DA - (B) - Ratio	0.2	4	494	113	124	40	522	113	124	41
CHFM03 - 614□DA - (B) - Ratio	0.25	4	494	113	124	40	522	113	124	41
CHFM05 - 614□DA - (B) - Ratio	0.4	4	510	113	124	41	542	113	124	42
CHFM02 - 614□DB - (B) - Ratio	0.2	4	503	113	124	42	531	113	124	44
CHFM03 - 614□DB - (B) - Ratio	0.25	4	503	113	124	42	531	113	124	44
CHFM05 - 614□DB - (B) - Ratio	0.4	4	519	113	124	43	551	113	124	47
CHFM08 - 614□DB - (B) - Ratio	0.55	4	560	143	160	47	603	143	160	50
CHFM1 - 614□DB - (B) - Ratio	0.75	4	560	143	160	47	603	143	160	50
CHFM1H - 614□DB - (B) - Ratio	1.1	4	593	148	169	51	655	148	169	54
CHFM2 - 614□DB - (B) - Ratio	1.5	4	593	148	169	51	655	148	169	54
CHFM08 - 614□DC - (B) - Ratio	0.55	4	574	143	160	49	617	143	160	52
CHFM1 - 614□DC - (B) - Ratio	0.75	4	574	143	160	49	617	143	160	52
CHFM1H - 614□DC - (B) - Ratio	1.1	4	607	148	169	53	669	148	169	58
CHFM2 - 614□DC - (B) - Ratio	1.5	4	607	148	169	53	669	148	169	58
CHFM3 - 614□DC - (B) - Ratio	2.2	4	627	155	182	57	690	155	182	63

Note: 5. □ indicates 0 or 5, expressing combination with reduction ratio. Refer to the Selection Table for details.
6. "B" after the frame size indicates models equipped with brake.
7. Dimension of shaft end: Refer to pages F-28 to F-29 for details.
8. Dimensions in above drawings are subject to change without notice.

Dimension Tables Gearmotors (Horizontal Direction, Flange Mount)

CHFM□ Note: 1 - 616□DA to 618□DA

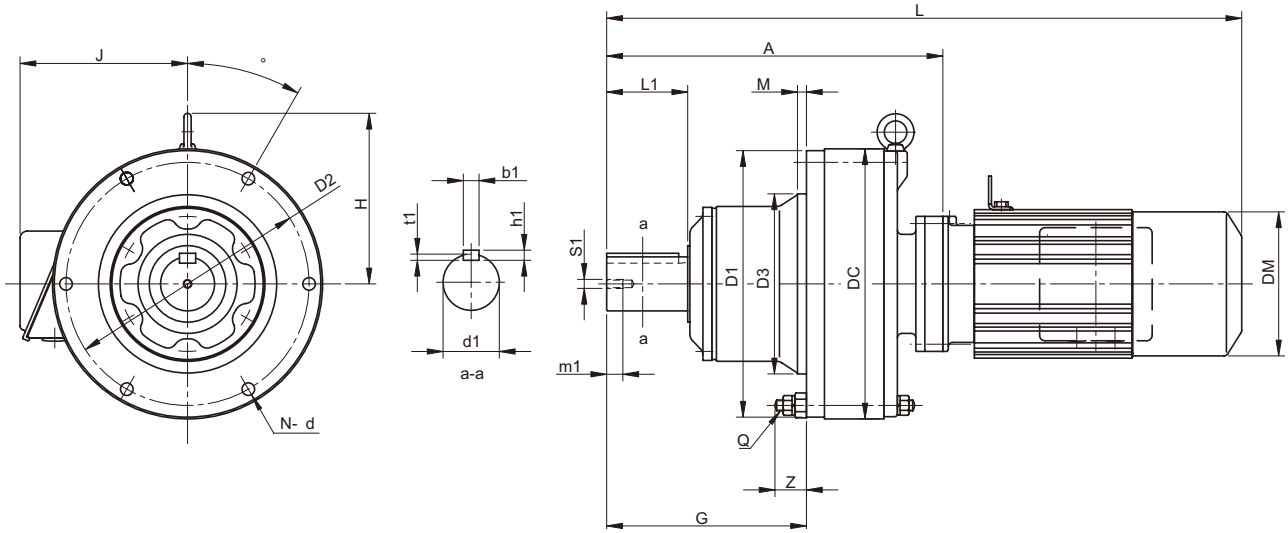

Frame size Note: 5	A	G	D1	D2	D3	DC	H	Q	Z	M	N	d	α°	Output Shaft Note: 2, 3, 7						
														d1	L1	b1	h1	t1	S1	m1
616□DA	373	222	296	270	200	300	189	M12	35	10	6	14	30	60	90	18	11	7	M10	18
616□DB	387	222	296	270	200	300	189	M12	35	10	6	14	30	60	90	18	11	7	M10	18
617□DA	418	262	330	300	250	340	216	M12	41	12	8	14	22.5	70	90	20	12	7.5	M12	24
617□DB	432	262	330	300	250	340	216	M12	41	12	8	14	22.5	70	90	20	12	7.5	M12	24
618□DA	474	299	360	330	280	370	231	M12	38	12	8	14	22.5	80	110	22	14	9	M12	24

Model Note: 5, 6	Motor		Standard				With Brake			
	[kW]	[P]	L	J	DM	W [kg]	L	J	DM	W [kg]
CHFM02 - 616□DA - (B) - Ratio	0.2	4	553	113	124	72	581	113	124	74
CHFM03 - 616□DA - (B) - Ratio	0.25	4	553	113	124	72	581	113	124	74
CHFM05 - 616□DA - (B) - Ratio	0.4	4	569	113	124	73	601	113	124	75
CHFM08 - 616□DA - (B) - Ratio	0.55	4	610	143	160	77	653	143	160	80
CHFM1 - 616□DA - (B) - Ratio	0.75	4	610	143	160	77	653	143	160	80
CHFM1H - 616□DA - (B) - Ratio	1.1	4	643	148	169	81	705	148	169	86
CHFM2 - 616□DA - (B) - Ratio	1.5	4	643	148	169	81	705	148	169	86
CHFM08 - 616□DB - (B) - Ratio	0.55	4	624	143	160	79	667	143	160	82
CHFM1 - 616□DB - (B) - Ratio	0.75	4	624	143	160	79	667	143	160	82
CHFM1H - 616□DB - (B) - Ratio	1.1	4	657	148	169	83	719	148	169	88
CHFM2 - 616□DB - (B) - Ratio	1.5	4	657	148	169	83	719	148	169	88
CHFM3 - 616□DB - (B) - Ratio	2.2	4	677	155	182	87	740	155	182	93
CHFM02 - 617□DA - (B) - Ratio	0.2	4	598	113	124	92	626	113	124	94
CHFM03 - 617□DA - (B) - Ratio	0.25	4	598	113	124	92	626	113	124	94
CHFM05 - 617□DA - (B) - Ratio	0.4	4	614	113	124	93	646	113	124	95
CHFM08 - 617□DA - (B) - Ratio	0.55	4	655	143	160	97	698	143	160	100
CHFM1 - 617□DA - (B) - Ratio	0.75	4	655	143	160	97	698	143	160	100
CHFM1H - 617□DA - (B) - Ratio	1.1	4	688	148	169	101	750	148	169	106
CHFM2 - 617□DA - (B) - Ratio	1.5	4	688	148	169	101	750	148	169	106
CHFM08 - 617□DB - (B) - Ratio	0.55	4	669	143	160	98	712	143	160	101
CHFM1 - 617□DB - (B) - Ratio	0.75	4	669	143	160	98	712	143	160	101
CHFM1H - 617□DB - (B) - Ratio	1.1	4	702	148	169	102	764	148	169	107
CHFM2 - 617□DB - (B) - Ratio	1.5	4	702	148	169	102	764	148	169	107
CHFM3 - 617□DB - (B) - Ratio	2.2	4	722	155	182	106	785	155	182	112
CHFM05 - 618□DA - (B) - Ratio	0.4	4	670	113	124	136	702	113	124	138
CHFM08 - 618□DA - (B) - Ratio	0.55	4	711	143	160	140	754	143	160	143
CHFM1 - 618□DA - (B) - Ratio	0.75	4	711	143	160	140	754	143	160	143
CHFM1H - 618□DA - (B) - Ratio	1.1	4	744	148	169	144	806	148	169	149
CHFM2 - 618□DA - (B) - Ratio	1.5	4	744	148	169	144	806	148	169	149
CHFM3 - 618□DA - (B) - Ratio	2.2	4	764	155	182	148	827	155	182	154

Note: 1. □ indicates motor capacity.
2. Dimension of shaft end diameter: Dimension tolerance conforms to JIS B 0401-1976 "h6."
3. Dimension of shaft end key: Dimension tolerance conforms to JIS B 1301-1996 "Parallel Key."
4. Pilot diameter (ϕD3): Dimension tolerance conforms to JIS B 0401-1976 "g6."

Dimension Tables Gearmotors (Horizontal Direction, Flange Mount)

CHFM□ (Note: 1) - 616□DC to 618□DB

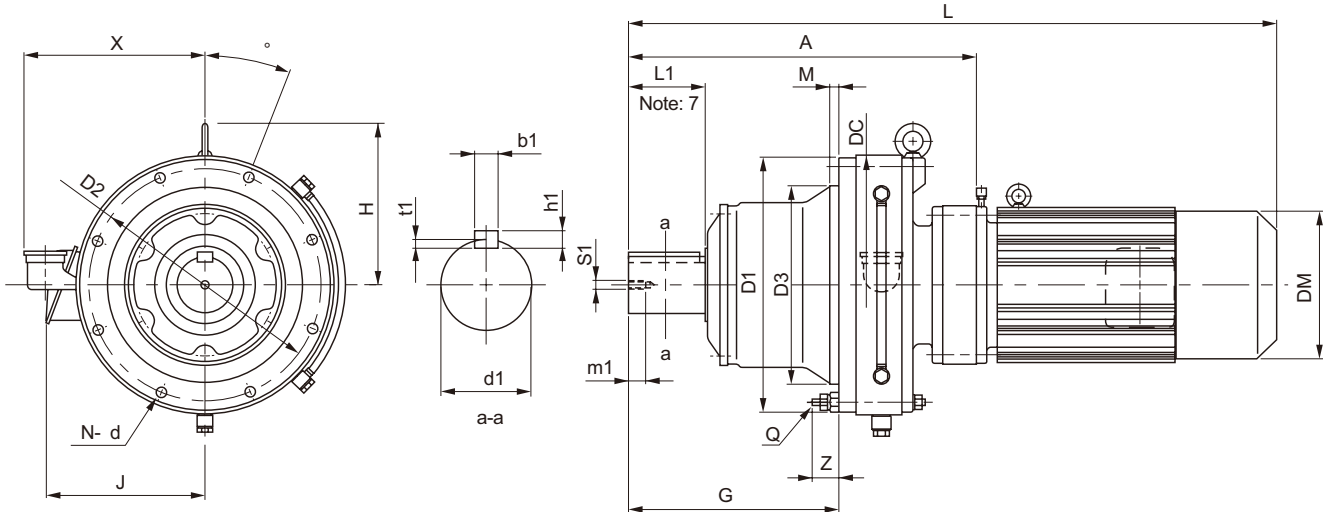

Frame size (Note: 5)	A	G	D1	D2	D3	DC	H	Q	Z	M	N	d	α°	X	Output Shaft (Note: 2, 3, 7) d1	L1	b1	h1	t1	S1	m1
616□DC	389	222	296	270	200	300	189	M12	35	10	6	14	30	228	60	90	18	11	7	M10	18
617□DC	436	262	330	300	250	340	216	M12	41	12	8	14	22.5	243	70	90	20	12	7.5	M12	24
618□DB	496	299	360	330	280	370	231	M12	38	12	8	14	22.5	258	80	110	22	14	9	M12	24

Model (Note: 5, 6)	Motor [kW]	Motor [P]	Standard L	Standard J	Standard DM	Standard W [kg]	With Brake L	With Brake J	With Brake DM	With Brake W [kg]
CHFM1H - 616□DC - (B) - Ratio	1.1	4	659	148	169	89	721	148	169	94
CHFM2 - 616□DC - (B) - Ratio	1.5	4	659	148	169	89	721	148	169	94
CHFM3 - 616□DC - (B) - Ratio	2.2	4	679	155	182	93	742	155	182	100
CHFM4 - 616□DC - (B) - Ratio	3.0	4	702	166	222	103	774	166	222	113
CHFM5 - 616□DC - (B) - Ratio	3.7	4	702	166	222	103	774	166	222	113
CHFM8 - 616□DC - (B) - Ratio	5.5	4	746	166	222	110	818	166	222	120
CHFM1H - 617□DC - (B) - Ratio	1.1	4	706	148	169	113	768	148	169	118
CHFM2 - 617□DC - (B) - Ratio	1.5	4	706	148	169	113	768	148	169	118
CHFM3 - 617□DC - (B) - Ratio	2.2	4	726	155	182	117	789	155	182	124
CHFM4 - 617□DC - (B) - Ratio	3.0	4	749	166	222	127	821	166	222	137
CHFM5 - 617□DC - (B) - Ratio	3.7	4	749	166	222	127	821	166	222	137
CHFM8 - 617□DC - (B) - Ratio	5.5	4	793	166	222	134	865	166	222	144
CHFM1H - 618□DB - (B) - Ratio	1.1	4	766	148	169	159	828	148	169	164
CHFM2 - 618□DB - (B) - Ratio	1.5	4	766	148	169	159	828	148	169	164
CHFM3 - 618□DB - (B) - Ratio	2.2	4	786	155	182	162	849	155	182	169
CHFM4 - 618□DB - (B) - Ratio	3.0	4	809	166	222	172	881	166	222	182
CHFM5 - 618□DB - (B) - Ratio	3.7	4	809	166	222	172	881	166	222	182
CHFM8 - 618□DB - (B) - Ratio	5.5	4	853	166	222	179	925	166	222	189
CHFM10 - 618□DB - (B) - Ratio	7.5	4	876	211	251	194	971	211	251	212
CHFM15 - 618□DB - (B) - Ratio	11	4	936	211	251	208	1031	211	251	226

Note: 5. □ indicates 0 or 5, expressing combination with reduction ratio. Refer to the Selection Table for details.
6. "B" after the frame size indicates models equipped with brake.
7. Dimension of shaft end: Refer to pages F-28 to F-29 for details.
8. Dimensions in above drawings are subject to change without notice.

Dimension Tables Gearmotors (Horizontal Direction, Flange Mount)

CHFM□ Note: 1 - 619□DA to 619□DB

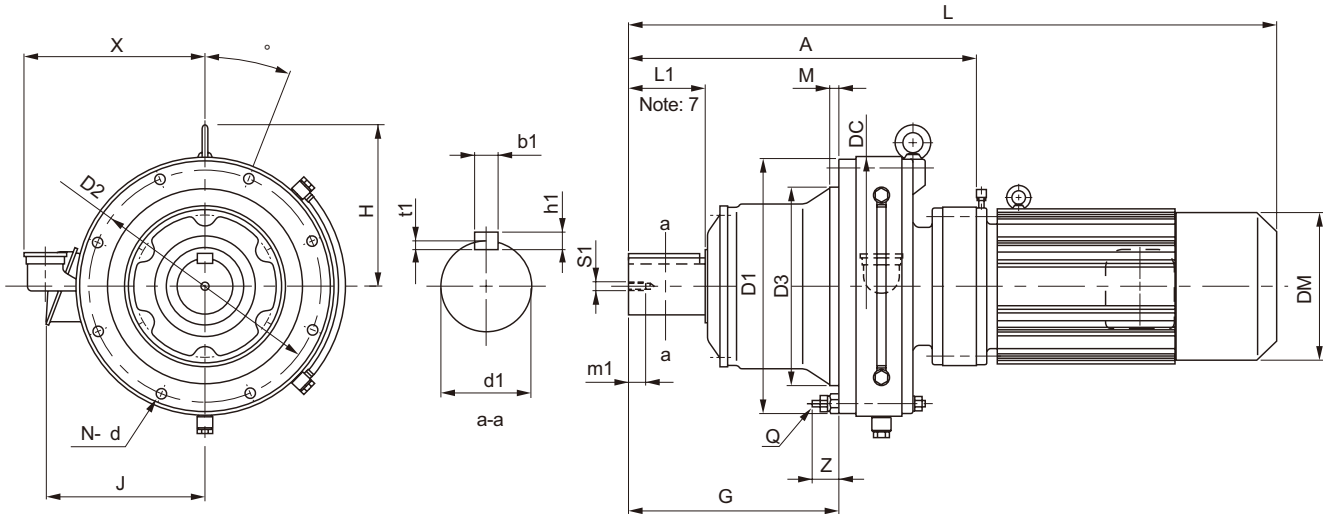

Frame size Note: 5	A	G	D1	D2	D3	DC	H	Q	Z	M	N	d	α°	X	Output Shaft Note: 2, 3, 7						
															d1	L1	b1	h1	t1	S1	m1
619□DA	556	365	420	380	320	430	281	M12	43	10	12	14	15	285	95	135	25	14	9	M20	34
619□DB	572	365	420	380	320	430	281	M12	43	10	12	14	15	285	95	135	25	14	9	M20	34

Model Note: 5, 6	Motor		Standard				With Brake			
	[kW]	[P]	L	J	DM	W [kg]	L	J	DM	W [kg]
CHFM1 - 619□DA - (B) - Ratio	0.75	4	793	143	160	201	836	143	160	204
CHFM1H - 619□DA - (B) - Ratio	1.1	4	826	148	169	205	888	148	169	210
CHFM2 - 619□DA - (B) - Ratio	1.5	4	826	148	169	205	888	148	169	210
CHFM3 - 619□DA - (B) - Ratio	2.2	4	846	155	182	209	909	155	182	216
CHFM4 - 619□DA - (B) - Ratio	3.0	4	869	166	222	219	941	166	222	229
CHFM5 - 619□DA - (B) - Ratio	3.7	4	869	166	222	219	941	166	222	229
CHFM8 - 619□DA - (B) - Ratio	5.5	4	913	166	222	226	985	166	222	236
CHFM2 - 619□DB - (B) - Ratio	1.5	4	842	148	169	212	904	148	169	217
CHFM3 - 619□DB - (B) - Ratio	2.2	4	862	155	182	216	925	155	182	223
CHFM4 - 619□DB - (B) - Ratio	3.0	4	885	166	222	226	957	166	222	236
CHFM5 - 619□DB - (B) - Ratio	3.7	4	885	166	222	226	957	166	222	236
CHFM8 - 619□DB - (B) - Ratio	5.5	4	929	166	222	233	1001	166	222	243
CHFM10 - 619□DB - (B) - Ratio	7.5	4	952	211	251	248	1047	211	251	266
CHFM15 - 619□DB - (B) - Ratio	11	4	1012	211	251	262	1107	211	251	280
CHFM20 - 619□DB - (B) - Ratio	15	4	1102	261	324	314	1207	261	324	348

Note: 1. □ indicates motor capacity.
2. Dimension of shaft end diameter: Dimension tolerance conforms to JIS B 0401-1976 "h6."
3. Dimension of shaft end key: Dimension tolerance conforms to JIS B 1301-1996 "Parallel Key."
4. Pilot diameter (ϕD3): Dimension tolerance conforms to JIS B 0401-1976 "g6."

Dimension Tables Gearmotors (Horizontal Direction, Flange Mount)

CHFM□ - 6205DA to 6215DA

Note: 1

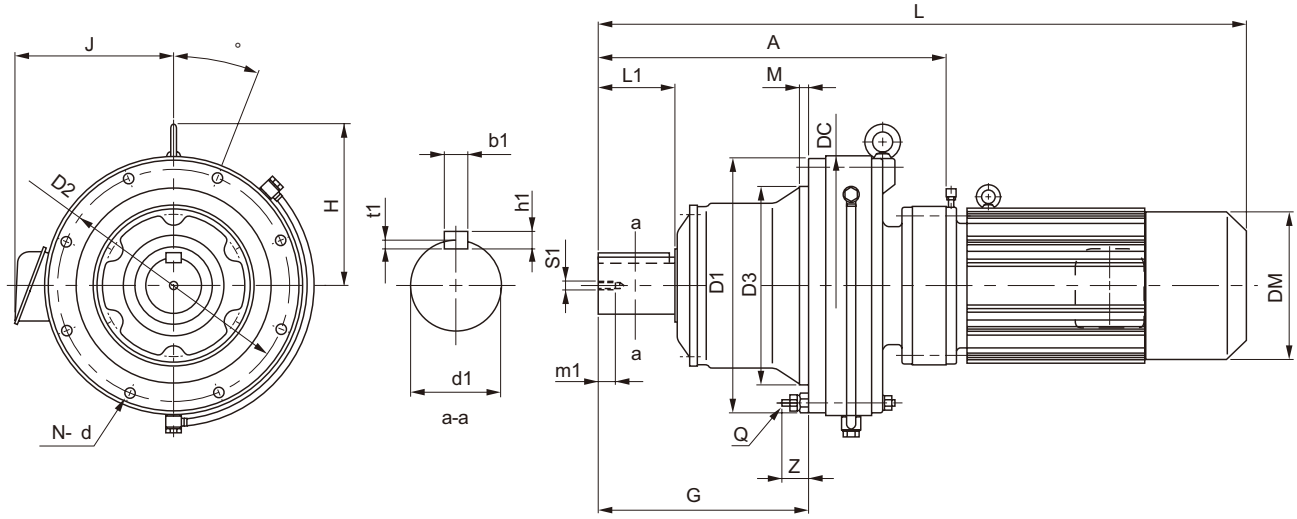

Frame size	A	G	D1	D2	D3	DC	H	Q	Z	M	N	d	α°	Output Shaft Note: 2, 3, 7						
														d1	L1	b1	h1	t1	S1	m1
6205DA	597	410	443	405	360	448	283	M16	57	20	12	18	15	100	165	28	16	10	M20	34
6205DB	624	410	443	405	360	448	283	M16	57	20	12	18	15	100	165	28	16	10	M20	34
6215DA	650	423	480	440	390	485	312	M18	57	20	12	20.5	15	110	165	28	16	10	M20	34

Model Note: 6	Motor		Standard				With Brake			
	[kW]	[P]	L	J	DM	W [kg]	L	J	DM	W [kg]
CHFM1 - 6205DA - (B) - Ratio	0.75	4	834	143	160	225	877	143	160	228
CHFM2 - 6205DA - (B) - Ratio	1.5	4	867	148	169	229	929	148	169	234
CHFM3 - 6205DA - (B) - Ratio	2.2	4	887	155	182	233	949	155	182	240
CHFM4 - 6205DA - (B) - Ratio	3.0	4	910	166	222	243	982	166	222	253
CHFM5 - 6205DA - (B) - Ratio	3.7	4	910	166	222	243	982	166	222	253
CHFM8 - 6205DA - (B) - Ratio	5.5	4	954	166	222	250	1026	166	222	260
CHFM3 - 6205DB - (B) - Ratio	2.2	4	914	155	182	245	977	155	182	252
CHFM4 - 6205DB - (B) - Ratio	3.0	4	937	166	222	255	1009	166	222	265
CHFM5 - 6205DB - (B) - Ratio	3.7	4	937	166	222	255	1009	166	222	265
CHFM8 - 6205DB - (B) - Ratio	5.5	4	981	166	222	262	1053	166	222	272
CHFM10 - 6205DB - (B) - Ratio	7.5	4	1004	211	251	277	1099	211	251	295
CHFM15 - 6205DB - (B) - Ratio	11	4	1064	211	251	290	1159	211	251	308
CHFM20 - 6205DB - (B) - Ratio	15	4	1154	261	324	342	1259	261	324	375
CHFM2 - 6215DA - (B) - Ratio	1.5	4	920	148	169	321	982	148	169	326
CHFM3 - 6215DA - (B) - Ratio	2.2	4	940	155	182	324	1003	155	182	331
CHFM4 - 6215DA - (B) - Ratio	3.0	4	963	166	222	334	1035	166	222	344
CHFM5 - 6215DA - (B) - Ratio	3.7	4	963	166	222	334	1035	166	222	344
CHFM8 - 6215DA - (B) - Ratio	5.5	4	1007	166	222	341	1079	166	222	351
CHFM10 - 6215DA - (B) - Ratio	7.5	4	1030	211	251	356	1125	211	251	374
CHFM15 - 6215DA - (B) - Ratio	11	4	1090	211	251	369	1185	211	251	387
CHFM20 - 6215DA - (B) - Ratio	15	4	1180	261	324	421	1285	261	324	455

Note: 5. □ indicates 0 or 5, expressing combination with reduction ratio. Refer to the Selection Table for details.
6. "B" after the frame size indicates models equipped with brake.
7. Dimension of shaft end: Refer to pages F-28 to F-29 for details.
8. Dimensions in above drawings are subject to change without notice.

Dimension Tables Gearmotors (Horizontal Direction, Flange Mount)

CHFM□ Note: 1 - 6215DB to 6225DB

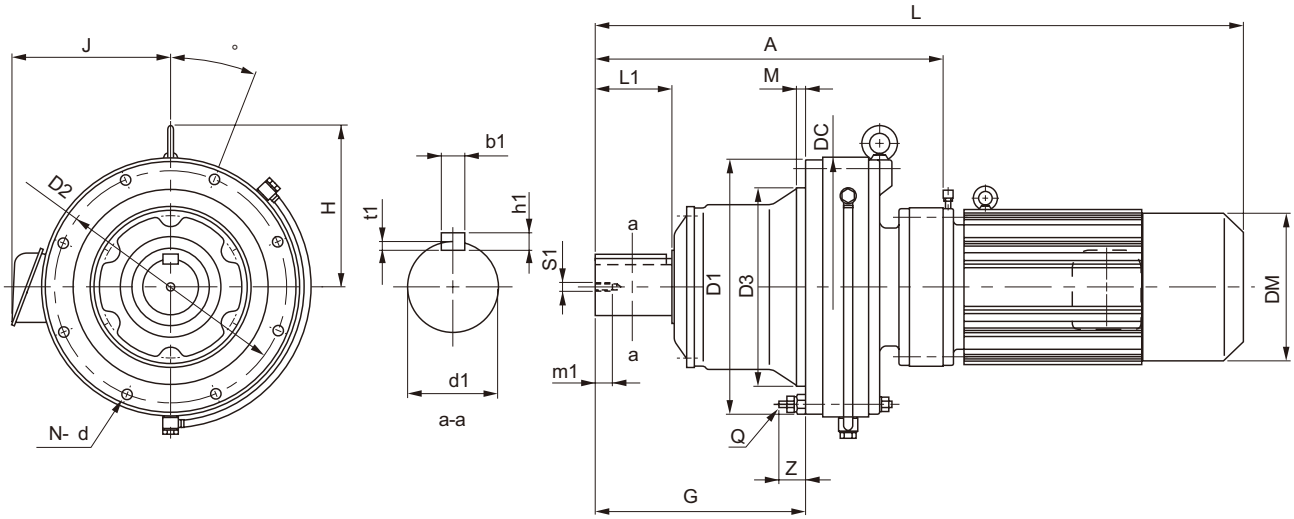

Frame size	A	G	D1	D2	D3	DC	H	Q	Z	M	N	d	α°	Output Shaft Note: 2, 3, 6						
														d1	L1	b1	h1	t1	S1	m1
6215DB	675	423	480	440	390	485	312	M18	57	20	12	20.5	15	110	165	28	16	10	M20	34
6225DA	692	454	521	475	420	526	333	M20	65	20	12	22	15	120	165	32	18	11	M20	34
6225DB	735	454	521	475	420	526	333	M20	65	20	12	22	15	120	165	32	18	11	M20	34

Model Note: 5	Motor		Standard				With Brake			
	[kW]	[P]	L	J	DM	W [kg]	L	J	DM	W [kg]
CHFM5 - 6215DB - (B) - Ratio	3.7	4	993	166	222	353	1065	166	222	363
CHFM8 - 6215DB - (B) - Ratio	5.5	4	1037	166	222	360	1109	166	222	370
CHFM10 - 6215DB - (B) - Ratio	7.5	4	1060	211	251	376	1155	211	251	393
CHFM15 - 6215DB - (B) - Ratio	11	4	1120	211	251	390	1215	211	251	407
CHFM20 - 6215DB - (B) - Ratio	15	4	1205	261	324	443	1310	261	324	477
CHFM25 - 6215DB - (B) - Ratio	18.5	4	1300	340	394	518	1465	340	394	569
CHFM30 - 6215DB - (B) - Ratio	22	4	1300	340	394	518	1465	340	394	569
CHFM2 - 6225DA - (B) - Ratio	1.5	4	962	148	169	378	1024	148	169	383
CHFM3 - 6225DA - (B) - Ratio	2.2	4	982	155	182	381	1045	155	182	388
CHFM4 - 6225DA - (B) - Ratio	3.0	4	1005	166	222	391	1077	166	222	401
CHFM5 - 6225DA - (B) - Ratio	3.7	4	1005	166	222	391	1077	166	222	401
CHFM8 - 6225DA - (B) - Ratio	5.5	4	1049	166	222	398	1121	166	222	408
CHFM10 - 6225DA - (B) - Ratio	7.5	4	1072	211	251	413	1167	211	251	431
CHFM15 - 6225DA - (B) - Ratio	11	4	1132	211	251	427	1227	211	251	445
CHFM20 - 6225DA - (B) - Ratio	15	4	1222	261	324	479	1327	261	324	512
CHFM5 - 6225DB - (B) - Ratio	3.7	4	1058	166	222	436	1130	166	222	447
CHFM8 - 6225DB - (B) - Ratio	5.5	4	1102	166	222	443	1174	166	222	454
CHFM10 - 6225DB - (B) - Ratio	7.5	4	1125	211	251	458	1220	211	251	476
CHFM15 - 6225DB - (B) - Ratio	11	4	1185	211	251	472	1280	211	251	490
CHFM20 - 6225DB - (B) - Ratio	15	4	1265	261	324	526	1370	261	324	560
CHFM25 - 6225DB - (B) - Ratio	18.5	4	1360	340	394	598	1525	340	394	649
CHFM30 - 6225DB - (B) - Ratio	22	4	1360	340	394	598	1525	340	394	649
CHFM40 - 6225DB - (B) - Ratio	30	4	1360	340	394	615	1525	340	394	666

Note: 1. □ indicates motor capacity.
2. Dimension of shaft end diameter: Dimension tolerance conforms to JIS B 0401-1976 "h6."
3. Dimension of shaft end key: Dimension tolerance conforms to JIS B 1301-1996 "Parallel Key."
4. Pilot diameter (ϕD3): Dimension tolerance conforms to JIS B 0401-1976 "g6."

Dimension Tables Gearmotors (Horizontal Direction, Flange Mount)

CHFM[ ]- 6235DA to 6245DB

Note: 1

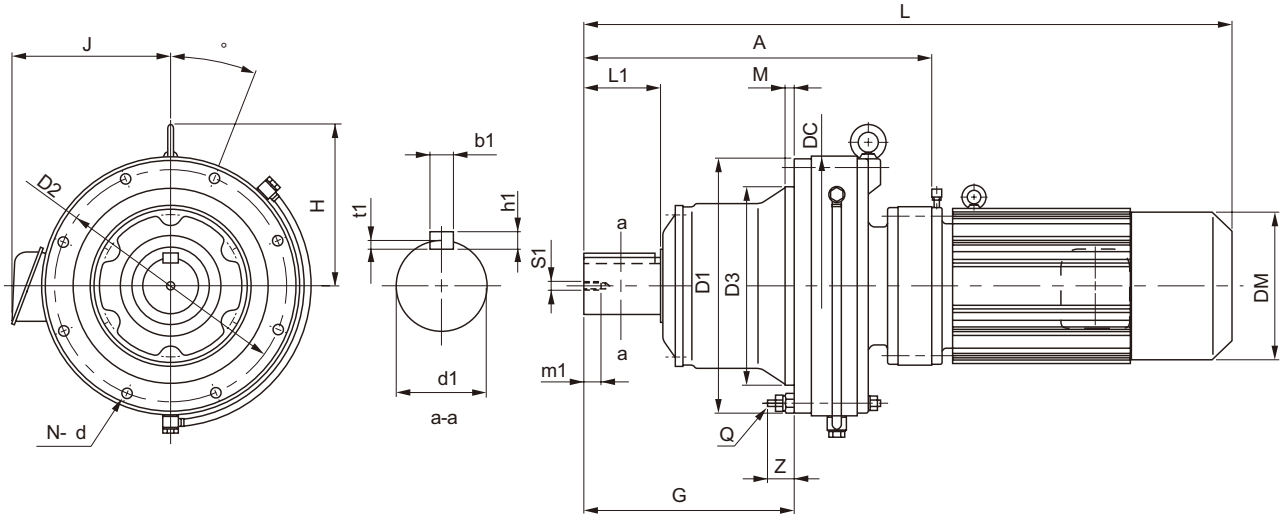

Frame size	A	G	D1	D2	D3	DC	H	Q	Z	M	N	d	α°	Output Shaft Note: 2, 3, 6						
														d1	L1	b1	h1	t1	S1	m1
6235DA	778	505	557	510	455	562	351	M20	68	20	12	22	15	130	200	32	18	11	M24	41
6235DB	800	505	557	510	455	562	351	M20	68	20	12	22	15	130	200	32	18	11	M24	41
6245DA	816	529	615	560	500	614	395	M24	65	25	12	27	15	140	200	36	20	12	M24	41
6245DB	837	529	615	560	500	614	395	M24	65	25	12	27	15	140	200	36	20	12	M24	41

Model Note: 5	Motor		Standard				With Brake			
	[kW]	[P]	L	J	DM	W [kg]	L	J	DM	W [kg]
CHFM3 - 6235DA - (B) - Ratio	2.2	4	1068	155	182	485	1131	155	182	491
CHFM4 - 6235DA - (B) - Ratio	3.0	4	1091	166	222	494	1163	166	222	504
CHFM5 - 6235DA - (B) - Ratio	3.7	4	1091	166	222	494	1163	166	222	504
CHFM8 - 6235DA - (B) - Ratio	5.5	4	1135	166	222	501	1207	166	222	511
CHFM10 - 6235DA - (B) - Ratio	7.5	4	1163	211	251	517	1258	211	251	534
CHFM15 - 6235DA - (B) - Ratio	11	4	1223	211	251	531	1318	211	251	548
CHFM20 - 6235DA - (B) - Ratio	15	4	1308	261	324	584	1413	261	324	618
CHFM25 - 6235DA - (B) - Ratio	18.5	4	1403	340	394	661	1568	340	394	712
CHFM30 - 6235DA - (B) - Ratio	22	4	1403	340	394	661	1568	340	394	712
CHFM15 - 6235DB - (B) - Ratio	11	4	1245	211	251	567	1340	211	251	585
CHFM20 - 6235DB - (B) - Ratio	15	4	1330	261	324	629	1435	261	324	735
CHFM25 - 6235DB - (B) - Ratio	18.5	4	1425	340	394	696	1590	340	394	747
CHFM30 - 6235DB - (B) - Ratio	22	4	1425	340	394	696	1590	340	394	747
CHFM40 - 6235DB - (B) - Ratio	30	4	1425	340	394	710	1590	340	394	753
CHFM50 - 6235DB - (B) - Ratio	37	4	1540	340	394	748	1755	340	394	845
CHFM3 - 6245DA - (B) - Ratio	2.2	4	1106	155	182	593	1169	155	182	599
CHFM4 - 6245DA - (B) - Ratio	3.0	4	1129	166	222	602	1201	166	222	612
CHFM5 - 6245DA - (B) - Ratio	3.7	4	1129	166	222	602	1201	166	222	612
CHFM8 - 6245DA - (B) - Ratio	5.5	4	1173	166	222	609	1245	166	222	619
CHFM10 - 6245DA - (B) - Ratio	7.5	4	1201	211	251	625	1296	211	251	642
CHFM15 - 6245DA - (B) - Ratio	11	4	1261	211	251	639	1356	211	251	656
CHFM20 - 6245DA - (B) - Ratio	15	4	1346	261	324	692	1451	261	324	726
CHFM25 - 6245DA - (B) - Ratio	18.5	4	1441	340	394	763	1606	340	394	814
CHFM30 - 6245DA - (B) - Ratio	22	4	1441	340	394	763	1606	340	394	814
CHFM15 - 6245DB - (B) - Ratio	11	4	1282	211	251	663	1377	211	251	681
CHFM20 - 6245DB - (B) - Ratio	15	4	1367	261	324	723	1472	261	324	752
CHFM25 - 6245DB - (B) - Ratio	18.5	4	1462	340	394	789	1627	340	394	840
CHFM30 - 6245DB - (B) - Ratio	22	4	1462	340	394	789	1627	340	394	840
CHFM40 - 6245DB - (B) - Ratio	30	4	1462	340	394	806	1627	340	394	849
CHFM50 - 6245DB - (B) - Ratio	37	4	1577	340	394	843	1792	340	394	940

Note: 5. "B" after the frame size indicates models equipped with brake.
6. Dimension of shaft end: Refer to pages F-28 to F-29 for details.
7. Dimensions in above drawings are subject to change without notice.

Dimension Tables Gearmotors (Horizontal Direction, Flange Mount)

CHFM[ ] Note: 1 - 6255DA to 6265DA

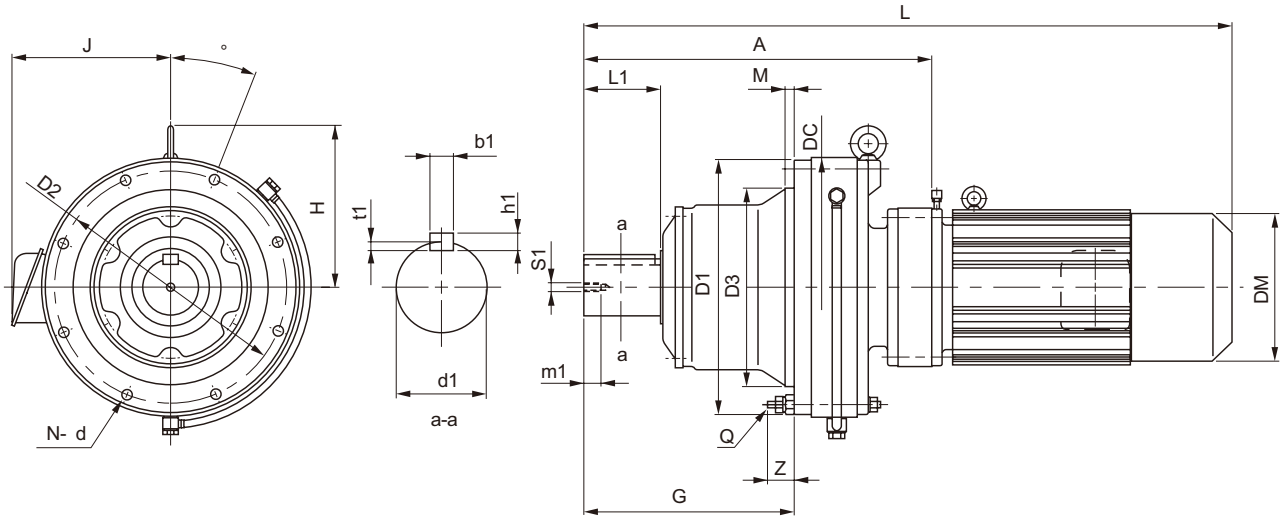

Frame size	A	G	D1	D2	D3	DC	H	Q	Z	M	N	d	α°	Output Shaft Note: 2, 3, 8						
														d1	L1	b1	h1	t1	S1	m1
6255DA	956	616	666	610	540	670	386	M24	88	30	12	27	15	160	240	40	22	13	M30	49
6255DB	978	616	666	610	540	670	386	M24	88	30	12	27	15	160	240	40	22	13	M30	49
6265DA	1088	712	730	660	570	736	453	M30	82	40	12	34	15	170	300	40	22	13	M30	49

Model Note: 7	Motor		Standard				With Brake			
	[kW]	[P]	L	J	DM	W [kg]	L	J	DM	W [kg]
CHFM5 - 6255DA - (B) - Ratio	3.7	4	1284	166	222	868	1356	166	222	878
CHFM8 - 6255DA - (B) - Ratio	5.5	4	1328	166	222	878	1400	166	222	888
CHFM10 - 6255DA - (B) - Ratio	7.5	4	1346	211	251	893	1441	211	251	908
CHFM15 - 6255DA - (B) - Ratio	11	4	1406	211	251	908	1501	211	251	923
CHFM20 - 6255DA - (B) - Ratio	15	4	1486	261	324	958	1591	261	324	994
CHFM25 - 6255DA - (B) - Ratio	18.5	4	1581	340	394	1032	1746	340	394	1083
CHFM30 - 6255DA - (B) - Ratio	22	4	1581	340	394	1032	1746	340	394	1083
CHFM40 - 6255DA - (B) - Ratio	30	4	1581	340	394	1052	1746	340	394	1095
CHFM15 - 6255DB - (B) - Ratio	11	4	1443	211	251	981	1538	211	251	996
CHFM20 - 6255DB - (B) - Ratio	15	4	1508	261	324	1031	1613	261	324	1065
CHFM25 - 6255DB - (B) - Ratio	18.5	4	1603	340	394	1107	1768	340	394	1158
CHFM30 - 6255DB - (B) - Ratio	22	4	1603	340	394	1107	1768	340	394	1158
CHFM40 - 6255DB - (B) - Ratio	30	4	1603	340	394	1122	1768	340	394	1165
CHFM50 - 6255DB - (B) - Ratio	37	4	1718	340	394	1159	1928	340	394	1256
CHFM60 - 6255DB - (B) - Ratio	45	4	1718	340	394	1159	1928	340	394	1256
CHFM8 - 6265DA - (B) - Ratio	5.5	4	1480	166	222	1196	1552	166	222	1206
CHFM10 - 6265DA - (B) - Ratio	7.5	4	1493	211	251	1211	1588	211	251	1231
CHFM15 - 6265DA - (B) - Ratio	11	4	1553	211	251	1226	1648	211	251	1241
CHFM20 - 6265DA - (B) - Ratio	15	4	1618	261	324	1276	1723	261	324	1311
CHFM25 - 6265DA - (B) - Ratio	18.5	4	1713	340	394	1355	1878	340	394	1400
CHFM30 - 6265DA - (B) - Ratio	22	4	1713	340	394	1355	1878	340	394	1400
CHFM40 - 6265DA - (B) - Ratio	30	4	1713	340	394	1370	1878	340	394	1413
CHFM50 - 6265DA - (B) - Ratio	37	4	1828	340	394	1405	2043	340	394	1502
CHFM60 - 6265DA - (B) - Ratio	45	4	1828	340	394	1405	2043	340	394	1502

Note: 1. [ ] indicates motor capacity.
2. Dimension of shaft end diameter: Dimension tolerance conforms to JIS B 0401-1976 "h6."
3. Dimension of shaft end key: Dimension tolerance conforms to JIS B 1301-1996 "Parallel Key."
4. Pilot diameter (ϕD3) of CHFM type: Dimension tolerance conforms to JIS B 0401-1976 "g6."
5. Pilot diameter (ϕD3) of CVVM type: Dimension tolerance conforms to JIS B 0401-1976 "f8."

Dimension Tables Gearmotors (Vertical, Slow Speed Shaft Down, V-Flange Mount)

CVVM□ Note: 1 - 607□SK to 609□SK

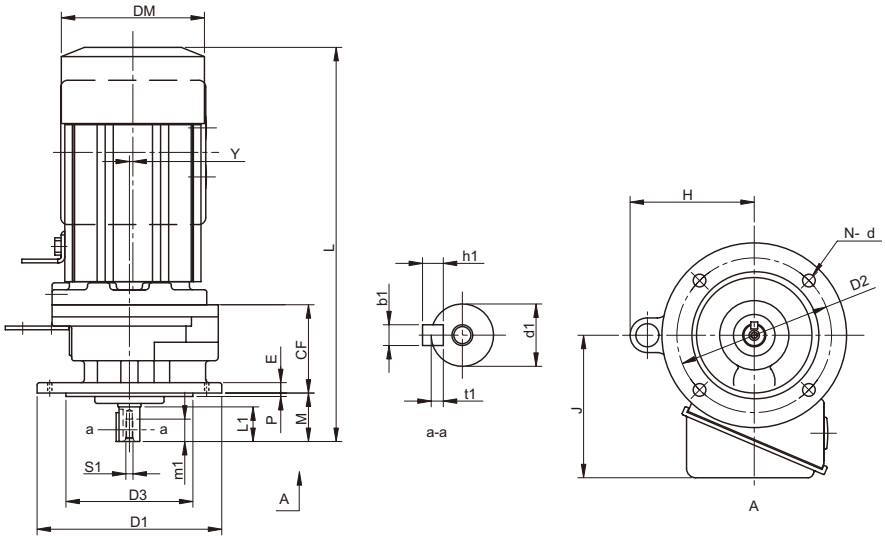

Frame size Note: 6	CF	D1	D2	D3	M	E	P	Y	N	d	H	Output Shaft Note: 2, 3, 8						
												d1	L1	b1	h1	t1	S1	m1
607□SK	77	160	134	110	42	9	3	0	4	11	-	18	30	6	6	3.5	M6	16
608□SK	92	160	134	110	48	9	3	0	4	11	-	22	35	6	6	3.5	M6	16
609□SK	118	160	134	110	48	9	3	0	4	11	107	28	35	8	7	4	M8	20

Model Note: 6, 7	Motor		Standard				With Brake			
	[kW]	[P]	L	J	DM	W [kg]	L	J	DM	W [kg]
CVVM05 - 607□SK - (B) - Ratio	0.4	4	310	113	124	12	342	113	124	13
CVVM08 - 607□SK - (B) - Ratio	0.55	4	350	143	160	15	394	143	160	17
CVVM1 - 607□SK - (B) - Ratio	0.75	4	350	143	160	15	394	143	160	17
CVVM05 - 608□SK - (B) - Ratio	0.4	4	336	113	124	13	368	113	124	14
CVVM08 - 608□SK - (B) - Ratio	0.55	4	377	143	160	16	420	143	160	18
CVVM1 - 608□SK - (B) - Ratio	0.75	4	377	143	160	16	420	143	160	18
CVVM1H - 608□SK - (B) - Ratio	1.1	4	410	148	169	21	472	148	169	25
CVVM2 - 608□SK - (B) - Ratio	1.5	4	410	148	169	21	472	148	169	25
CVVM05 - 609□SK - (B) - Ratio	0.4	4	362	113	124	15	394	113	124	16
CVVM08 - 609□SK - (B) - Ratio	0.55	4	403	143	160	18	446	143	160	20
CVVM1 - 609□SK - (B) - Ratio	0.75	4	403	143	160	18	446	143	160	20
CVVM1H - 609□SK - (B) - Ratio	1.1	4	436	148	169	23	498	148	169	27
CVVM2 - 609□SK - (B) - Ratio	1.5	4	436	148	169	23	498	148	169	27
CVVM3 - 609□SK - (B) - Ratio	2.2	4	456	155	182	27	519	155	182	33

Note: 6. □ indicates 0 or 5, expressing combination with reduction ratio. Refer to the Selection Table for details.
7. "B" after the frame size indicates models equipped with brake.
8. Dimension of shaft end: Refer to pages F-28 to F-29 for details.
9. Dimensions in above drawings are subject to change without notice.

Dimension Tables Gearmotors (Vertical, Slow Speed Shaft Down, V-Flange Mount)

CVVM□ Note: 1 - 610□SK to 611□SK

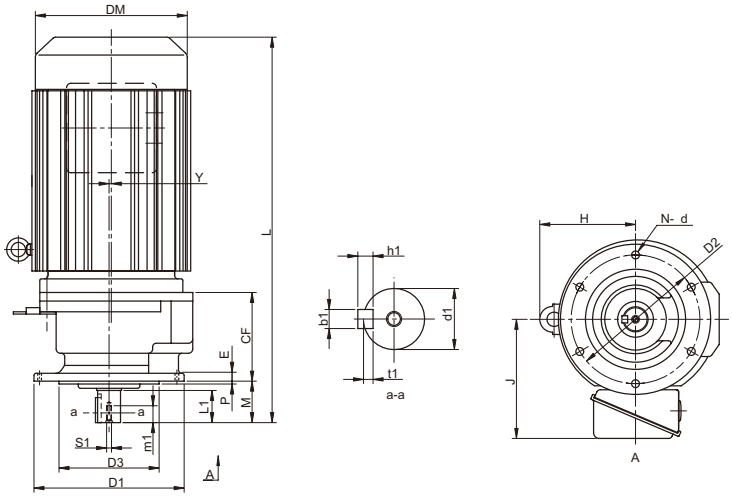

Frame size Note: 5	CF	D1	D2	D3	M	E	P	Y	N	d	H	Output Shaft Note: 2, 3, 7						
												d1	L1	b1	h1	t1	S1	m1
610□SK	122	160	134	110	48	9	3	0	4	11	116	28	35	8	7	4	M8	20
611□SK	124	210	180	140	58	11	4	3	6	11	134	32	45	10	8	5	M8	20

Model Note: 5, 6	Motor		Standard				With Brake			
	[kW]	[P]	L	J	DM	W [kg]	L	J	DM	W [kg]
CVVM05 - 610□SK - (B) - Ratio	0.4	4	362	113	124	16	393	113	124	17
CVVM08 - 610□SK - (B) - Ratio	0.55	4	403	143	160	19	452	143	160	21
CVVM1 - 610□SK - (B) - Ratio	0.75	4	403	143	160	19	452	143	160	21
CVVM1H - 610□SK - (B) - Ratio	1.1	4	436	148	169	24	493	148	169	28
CVVM2 - 610□SK - (B) - Ratio	1.5	4	436	148	169	24	493	148	169	28
CVVM3 - 610□SK - (B) - Ratio	2.2	4	456	155	182	28	519	155	182	34
CVVM4 - 610□SK - (B) - Ratio	3	4	491	166	222	40	563	166	222	51
CVVM5 - 610□SK - (B) - Ratio	3.7	4	491	166	222	40	563	166	222	51
CVVM08 - 611□SK - (B) - Ratio	0.55	4	419	143	160	29	462	143	160	31
CVVM1 - 611□SK - (B) - Ratio	0.75	4	419	143	160	29	462	143	160	31
CVVM1H - 611□SK - (B) - Ratio	1.1	4	452	148	169	34	514	148	169	38
CVVM2 - 611□SK - (B) - Ratio	1.5	4	452	148	169	34	514	148	169	38
CVVM3 - 611□SK - (B) - Ratio	2.2	4	472	155	182	38	535	155	182	44
CVVM4 - 611□SK - (B) - Ratio	3	4	495	166	222	50	567	166	222	61
CVVM5 - 611□SK - (B) - Ratio	3.7	4	495	166	222	50	567	166	222	61
CVVM8 - 611□SK - (B) - Ratio	5.5	4	539	166	222	58	611	166	222	69

Note: 1. □ indicates motor capacity.
2. Dimension of shaft end diameter: Dimension tolerance conforms to JIS B 0401-1976 "h6."
3. Dimension of shaft end key: Dimension tolerance conforms to JIS B 1301-1996 "Parallel Key."
4. Pilot diameter (ϕD3): Dimension tolerance conforms to JIS B 0401-1976 “f8.”

Dimension Tables Gearmotors (Universal Direction, V-Flange Mount)

CNVM□ (Note: 1) - 606□ to 609□

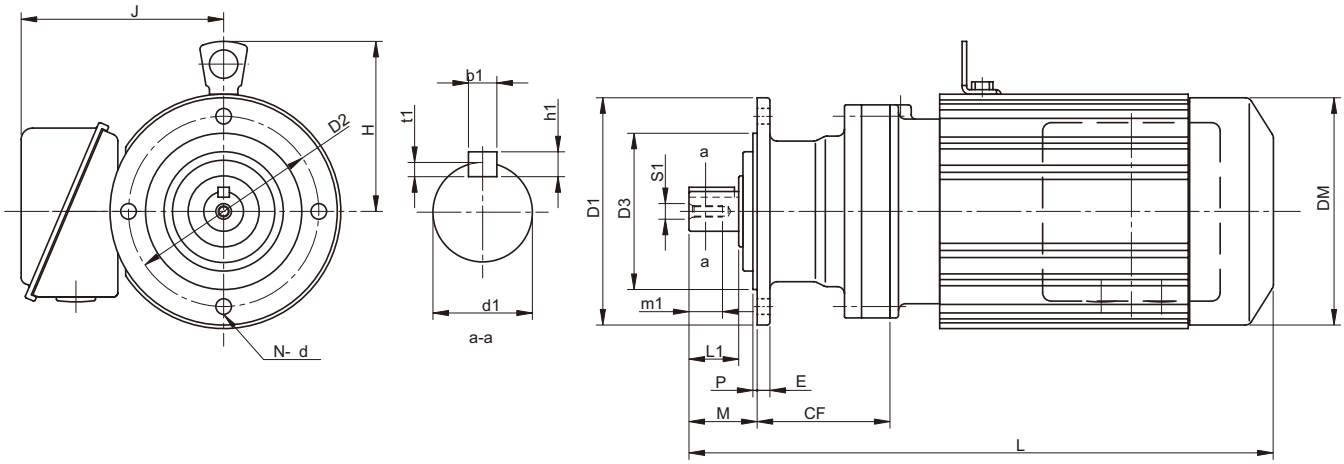

Frame size (Note: 5)	CF	D1	D2	D3	M	E	P	N	d	H	Output Shaft (Note: 2, 3, 7) d1	L1	b1	h1	t1	S1	m1
606□	58	120	102	80	34	8	3	6	9	-	14	25	5	5	3	M5	16
607□	56	160	134	110	42	9	3	4	11	-	18	30	6	6	3.5	M6	16
608□	81	160	134	110	48	9	3	4	11	-	22	35	6	6	3.5	M6	16
609□	94	160	134	110	48	9	3	4	11	107	28	35	8	7	4	M8	20

Model (Note: 5, 6)	Motor [kW]	Motor [P]	Standard L	Standard J	Standard DM	Standard W [kg]	With Brake L	With Brake J	With Brake DM	With Brake W [kg]
CNVM01 - 606□ - (B) - Ratio	0.1	4	254	113	119	7	261	113	124	9
CNVM02 - 606□ - (B) - Ratio	0.2	4	272	113	124	8	300	113	124	10
CNVM03 - 606□ - (B) - Ratio	0.25	4	272	113	124	9	300	113	124	10
CNVM01 - 607□ - (B) - Ratio	0.1	4	260	113	119	9	267	113	124	10
CNVM02 - 607□ - (B) - Ratio	0.2	4	278	113	124	10	306	113	124	11
CNVM03 - 607□ - (B) - Ratio	0.25	4	278	113	124	10	306	113	124	11
CNVM05 - 607□ - (B) - Ratio	0.4	4	294	113	124	11	326	113	124	12
CNVM01 - 608□ - (B) - Ratio	0.1	4	286	113	119	12	293	113	124	13
CNVM02 - 608□ - (B) - Ratio	0.2	4	304	113	124	13	332	113	124	14
CNVM03 - 608□ - (B) - Ratio	0.25	4	304	113	124	13	332	113	124	14
CNVM05 - 608□ - (B) - Ratio	0.4	4	320	113	124	15	352	113	124	16
CNVM08 - 608□ - (B) - Ratio	0.55	4	361	143	160	19	404	143	160	20
CNVM1 - 608□ - (B) - Ratio	0.75	4	361	143	160	19	404	143	160	20
CNVM01 - 609□ - (B) - Ratio	0.1	4	304	113	119	13	311	113	124	15
CNVM02 - 609□ - (B) - Ratio	0.2	4	322	113	124	14	350	113	124	16
CNVM03 - 609□ - (B) - Ratio	0.25	4	322	113	124	14	350	113	124	16
CNVM05 - 609□ - (B) - Ratio	0.4	4	338	113	124	15	370	113	124	17
CNVM08 - 609□ - (B) - Ratio	0.55	4	379	143	160	19	422	143	160	22
CNVM1 - 609□ - (B) - Ratio	0.75	4	379	143	160	19	422	143	160	22
CNVM1H - 609□ - (B) - Ratio	1.1	4	412	148	169	22	474	148	169	27
CNVM2 - 609□ - (B) - Ratio	1.5	4	412	148	169	22	474	148	169	27

Note: 5. □ indicates 0 or 5, expressing combination with reduction ratio. Refer to the Selection Table for details.
6. "B" after the frame size indicates models equipped with brake.
7. Dimension of shaft end: Refer to pages F-28 to F-29 for details.
8. Dimensions in above drawings are subject to change without notice.

Dimension Tables Gearmotors (Universal Direction, V-Flange Mount)

CNVM□ - 610□ to 612□ Note: 1

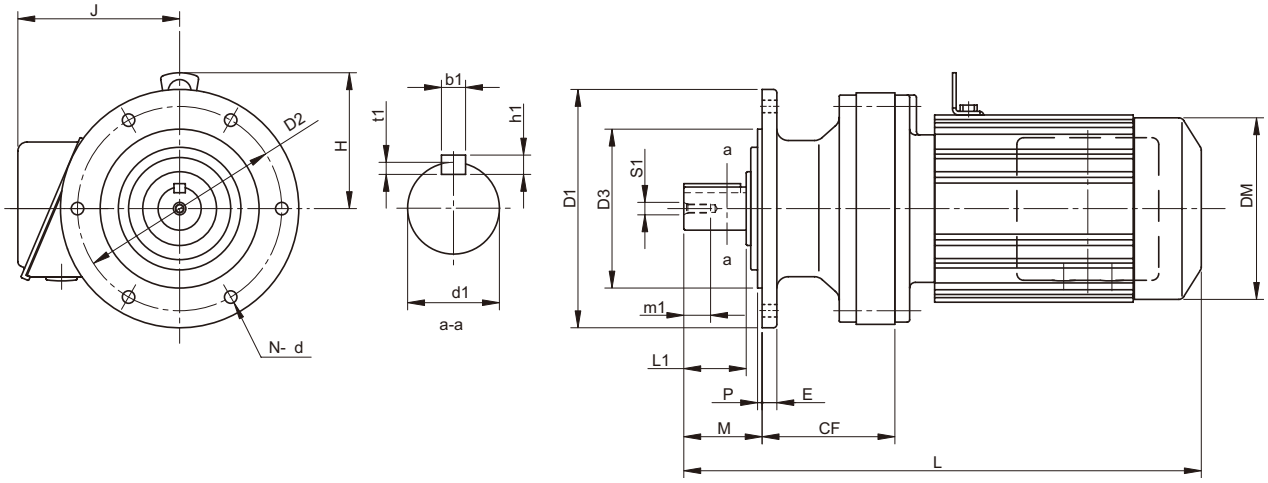

Frame size Note: 5	CF	D1	D2	D3	M	E	P	N	d	H	Output Shaft Note: 2, 3, 7						
											d1	L1	b1	h1	t1	S1	m1
610□	108	160	134	110	48	9	3	4	11	107	28	35	8	7	4	M8	20
611□	112	210	180	140	58	11	4	6	11	116	32	45	10	8	5	M8	20
612□	117	210	180	140	69	13	4	6	11	137	38	55	10	8	5	M8	20

Model Note: 5, 6	Motor		Standard				With Brake			
	[kW]	[P]	L	J	DM	W [kg]	L	J	DM	W [kg]
CNVM02 - 610□ - (B) - Ratio	0.2	4	336	113	124	16	364	113	124	18
CNVM03 - 610□ - (B) - Ratio	0.25	4	336	113	124	16	364	113	124	18
CNVM05 - 610□ - (B) - Ratio	0.4	4	352	113	124	17	384	113	124	19
CNVM08 - 610□ - (B) - Ratio	0.55	4	393	143	160	21	436	143	160	24
CNVM1 - 610□ - (B) - Ratio	0.75	4	393	143	160	21	436	143	160	24
CNVM1H - 610□ - (B) - Ratio	1.1	4	426	148	169	25	488	148	169	30
CNVM2 - 610□ - (B) - Ratio	1.5	4	426	148	169	25	488	148	169	30
CNVM3 - 610□ - (B) - Ratio	2.2	4	446	155	182	29	509	155	182	35
CNVM05 - 611□ - (B) - Ratio	0.4	4	363	113	124	19	394	113	124	21
CNVM08 - 611□ - (B) - Ratio	0.55	4	403	143	160	22	452	143	160	25
CNVM1 - 611□ - (B) - Ratio	0.75	4	403	143	160	22	452	143	160	25
CNVM1H - 611□ - (B) - Ratio	1.1	4	436	148	169	25	493	148	169	30
CNVM2 - 611□ - (B) - Ratio	1.5	4	436	148	169	25	493	148	169	30
CNVM3 - 611□ - (B) - Ratio	2.2	4	456	155	182	29	519	155	182	35
CNVM4 - 611□ - (B) - Ratio	3.0	4	491	166	222	39	563	166	222	49
CNVM5 - 611□ - (B) - Ratio	3.7	4	491	166	222	39	563	166	222	49
CNVM05 - 612□ - (B) - Ratio	0.4	4	387	113	124	30	419	113	124	31
CNVM08 - 612□ - (B) - Ratio	0.55	4	423	143	160	31	466	143	160	34
CNVM1 - 612□ - (B) - Ratio	0.75	4	423	143	160	31	466	143	160	34
CNVM1H - 612□ - (B) - Ratio	1.1	4	456	148	169	35	518	148	169	40
CNVM2 - 612□ - (B) - Ratio	1.5	4	456	148	169	35	518	148	169	40
CNVM3 - 612□ - (B) - Ratio	2.2	4	476	155	182	39	539	155	182	46
CNVM4 - 612□ - (B) - Ratio	3.0	4	499	166	222	49	571	166	222	59
CNVM5 - 612□ - (B) - Ratio	3.7	4	499	166	222	49	571	166	222	59
CNVM8 - 612□ - (B) - Ratio	5.5	4	543	166	222	56	615	166	222	66

Note: 1. ⬚ indicates motor capacity.
2. Dimension of shaft end diameter: Dimension tolerance conforms to JIS B 0401-1976 "h6."
3. Dimension of shaft end key: Dimension tolerance conforms to JIS B 1301-1996 "Parallel Key."
4. Pilot diameter (ϕD3): Dimension tolerance conforms to JIS B 0401-1976 “f8.”

Dimension Tables Gearmotors (Vertical, Slow Speed Shaft Down, V-Flange Mount)

CVVM□ Note: 1 - 613□ to 614□

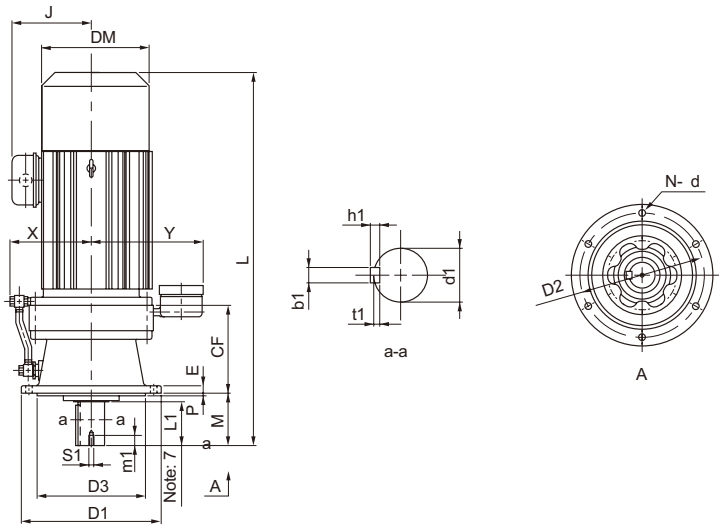

Frame size Note: 5	CF	D1	D2	D3	M	E	P	N	d	X	Y	Output Shaft Note: 2, 3, 7						
												d1	L1	b1	h1	t1	S1	m1
613□	164	260	230	200	76	15	4	6	11	152	233	50	61	14	9	5.5	M10	18
614□	164	260	230	200	96	15	4	6	11	152	233	50	81	14	9	5.5	M10	18

Model Note: 5, 6	Motor		Standard				With Brake			
	[kW]	[P]	L	J	DM	W [kg]	L	J	DM	W [kg]
CVVM08 - 613□ - (B) - Ratio	0.55	4	477	143	160	51	520	143	160	54
CVVM1 - 613□ - (B) - Ratio	0.75	4	477	143	160	51	520	143	160	54
CVVM1H - 613□ - (B) - Ratio	1.1	4	510	148	169	55	572	148	169	60
CVVM2 - 613□ - (B) - Ratio	1.5	4	510	148	169	55	572	148	169	60
CVVM3 - 613□ - (B) - Ratio	2.2	4	530	155	182	58	593	155	182	65
CVVM4 - 613□ - (B) - Ratio	3.0	4	553	166	222	68	625	166	222	78
CVVM5 - 613□ - (B) - Ratio	3.7	4	553	166	222	68	625	166	222	78
CVVM8 - 613□ - (B) - Ratio	5.5	4	597	166	222	75	669	166	222	85
CVVM10 - 613□ - (B) - Ratio	7.5	4	620	211	251	90	715	211	251	108
CVVM15 - 613□ - (B) - Ratio	11	4	680	211	251	104	775	211	251	121
CVVM1 - 614□ - (B) - Ratio	0.75	4	497	143	160	52	540	143	160	55
CVVM1H - 614□ - (B) - Ratio	1.1	4	530	148	169	56	592	148	169	61
CVVM2 - 614□ - (B) - Ratio	1.5	4	530	148	169	56	592	148	169	61
CVVM3 - 614□ - (B) - Ratio	2.2	4	550	155	182	59	613	155	182	66
CVVM4 - 614□ - (B) - Ratio	3.0	4	573	166	222	69	645	166	222	79
CVVM5 - 614□ - (B) - Ratio	3.7	4	573	166	222	69	645	166	222	79
CVVM8 - 614□ - (B) - Ratio	5.5	4	617	166	222	76	689	166	222	86
CVVM10 - 614□ - (B) - Ratio	7.5	4	640	211	251	91	735	211	251	109
CVVM15 - 614□ - (B) - Ratio	11	4	700	211	251	104	795	211	251	122
CVVM20 - 614□ - (B) - Ratio	15	4	790	261	324	156	895	261	324	190

Note: 5. □ indicates 0 or 5, expressing combination with reduction ratio. Refer to the Selection Table for details.
6. "B" after the frame size indicates models equipped with brake.
7. Dimension of shaft end: Refer to pages F-28 to F-29 for details.
8. Dimensions in above drawings are subject to change without notice.

Dimension Tables Gearmotors (Vertical, Slow Speed Shaft Down, V-Flange Mount)

CVVM[ ]Note: 1 - 616□ to 617□

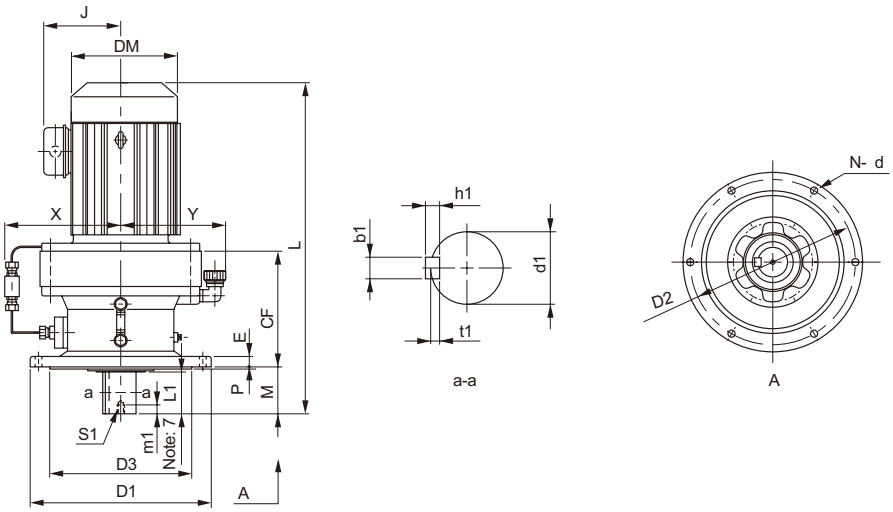

Frame size Note: 5	CF	D1	D2	D3	M	E	P	N	d	X	Y	Output Shaft Note: 2, 3, 7						
												d1	L1	b1	h1	t1	S1	m1
616□	219	340	310	270	89	20	4	6	11	217	200	60	80	18	11	7	M10	18
617□	258	400	360	316	94	22	5	8	14	222	225	70	84	20	12	7.5	M12	24

Model Note: 5, 6	Motor		Standard				With Brake			
	[kW]	[P]	L	J	DM	W [kg]	L	J	DM	W [kg]
CVVM1H - 616□ - (B) - Ratio	1.1	4	583	148	169	89	645	148	169	94
CVVM2 - 616□ - (B) - Ratio	1.5	4	583	148	169	89	645	148	169	94
CVVM3 - 616□ - (B) - Ratio	2.2	4	598	155	182	92	661	155	182	98
CVVM4 - 616□ - (B) - Ratio	3.0	4	621	166	222	101	693	166	222	111
CVVM5 - 616□ - (B) - Ratio	3.7	4	621	166	222	101	693	166	222	111
CVVM8 - 616□ - (B) - Ratio	5.5	4	665	166	222	108	737	166	222	118
CVVM10 - 616□ - (B) - Ratio	7.5	4	693	211	251	124	788	211	251	141
CVVM15 - 616□ - (B) - Ratio	11	4	753	211	251	138	848	211	251	155
CVVM20 - 616□ - (B) - Ratio	15	4	838	261	324	191	943	261	324	225
CVVM25 - 616□ - (B) - Ratio	18.5	4	933	340	394	267	1098	340	394	318
CVVM30 - 616□ - (B) - Ratio	22	4	933	340	394	267	1098	340	394	318
CVVM4 - 617□ - (B) - Ratio	3.0	4	680	166	222	144	752	166	222	154
CVVM5 - 617□ - (B) - Ratio	3.7	4	680	166	222	144	752	166	222	154
CVVM8 - 617□ - (B) - Ratio	5.5	4	724	166	222	151	796	166	222	161
CVVM10 - 617□ - (B) - Ratio	7.5	4	742	211	251	166	837	211	251	184
CVVM15 - 617□ - (B) - Ratio	11	4	802	211	251	180	897	211	251	198
CVVM20 - 617□ - (B) - Ratio	15	4	882	261	324	234	987	261	324	268
CVVM25 - 617□ - (B) - Ratio	18.5	4	977	340	394	306	1142	340	324	357
CVVM30 - 617□ - (B) - Ratio	22	4	977	340	394	306	1142	340	324	357
CVVM40 - 617□ - (B) - Ratio	30	4	977	340	394	323	1142	340	324	366

Note: 1. [ ] indicates motor capacity.
2. Dimension of shaft end diameter: Dimension tolerance conforms to JIS B 0401-1976 "h6."
3. Dimension of shaft end key: Dimension tolerance conforms to JIS B 1301-1996 "Parallel Key."
4. Pilot diameter (ϕD3): Dimension tolerance conforms to JIS B 0401-1976 “f8.”

Dimension Tables Gearmotors (Vertical, Slow Speed Shaft Down, V-Flange Mount)

CVVM□ Note: 1 - 618□ to 619□

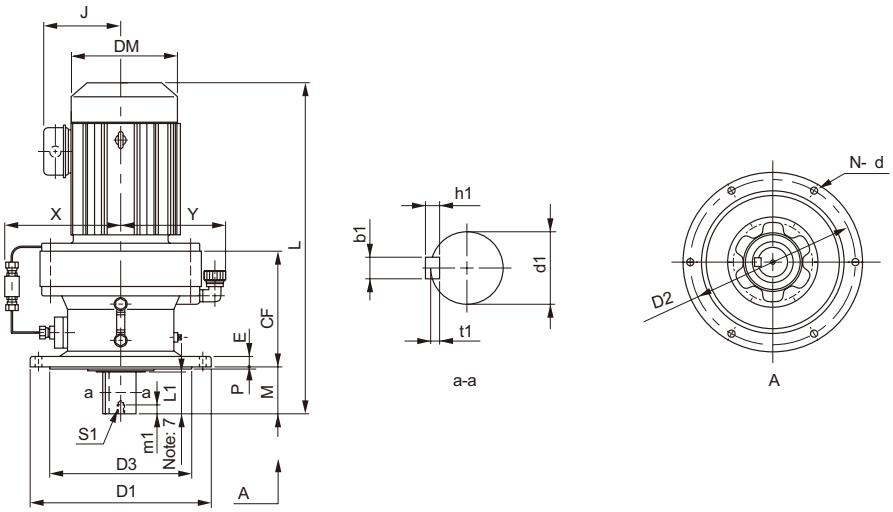

Frame size Note: 5	CF	D1	D2	D3	M	E	P	N	d	X	Y	Output Shaft Note: 2, 3, 7						
												d1	L1	b1	h1	t1	S1	m1
618□	279	430	390	345	110	22	5	8	18	237	240	80	100	22	14	9	M12	24
619□	320	490	450	400	145	30	6	12	18	265	270	95	125	25	14	9	M20	34

Model Note: 5, 6	Motor		Standard				With Brake			
	[kW]	[P]	L	J	DM	W [kg]	L	J	DM	W [kg]
CVVM4 - 618□ - (B) - Ratio	3.0	4	717	166	222	170	789	166	222	180
CVVM5 - 618□ - (B) - Ratio	3.7	4	717	166	222	170	789	166	222	180
CVVM8 - 618□ - (B) - Ratio	5.5	4	761	166	222	178	833	166	222	188
CVVM10 - 618□ - (B) - Ratio	7.5	4	779	211	251	193	874	211	251	211
CVVM15 - 618□ - (B) - Ratio	11	4	839	211	251	207	934	211	251	225
CVVM20 - 618□ - (B) - Ratio	15	4	919	261	324	267	1024	261	324	296
CVVM25 - 618□ - (B) - Ratio	18.5	4	1014	340	394	333	1179	340	394	384
CVVM30 - 618□ - (B) - Ratio	22	4	1014	340	394	333	1179	340	394	384
CVVM40 - 618□ - (B) - Ratio	30	4	1014	340	394	350	1179	340	394	393
CVVM50 - 618□ - (B) - Ratio	37	4	1129	340	394	398	1344	340	394	495
CVVM60 - 618□ - (B) - Ratio	45	4	1129	340	394	398	1344	340	394	495
CVVM8 - 619□ - (B) - Ratio	5.5	4	857	166	222	250	929	166	222	260
CVVM10 - 619□ - (B) - Ratio	7.5	4	870	211	251	263	965	211	251	281
CVVM15 - 619□ - (B) - Ratio	11	4	930	211	251	277	1025	211	251	295
CVVM20 - 619□ - (B) - Ratio	15	4	995	261	324	330	1100	261	324	365
CVVM25 - 619□ - (B) - Ratio	18.5	4	1090	340	394	408	1255	340	394	453
CVVM256 - 619□ - (B) - Ratio	18.5	6	1090	340	394	421	1255	340	394	466
CVVM30 - 619□ - (B) - Ratio	22	4	1090	340	394	408	1255	340	394	453
CVVM40 - 619□ - (B) - Ratio	30	4	1090	340	394	421	1255	340	394	466
CVVM406 - 619□ - (B) - Ratio	30	6	1205	340	394	459	1420	340	394	556
CVVM50 - 619□ - (B) - Ratio	37	4	1205	340	394	459	1420	340	394	556
CVVM506 - 619□ - (B) - Ratio	37	6	1205	340	394	459	1420	340	394	556
CVVM60 - 619□ - (B) - Ratio	45	4	1205	340	394	459	1420	340	394	556

Note: 5. □ indicates 0 or 5, expressing combination with reduction ratio. Refer to the Selection Table for details.
6. "B" after the frame size indicates models equipped with brake.
7. Dimension of shaft end: Refer to pages F-28 to F-29 for details.
8. Dimensions in above drawings are subject to change without notice.

Dimension Tables Gearmotors (Vertical, Slow Speed Shaft Down, V-Flange Mount)

CVVM[ ] Note: 1 - 6205 to 6215

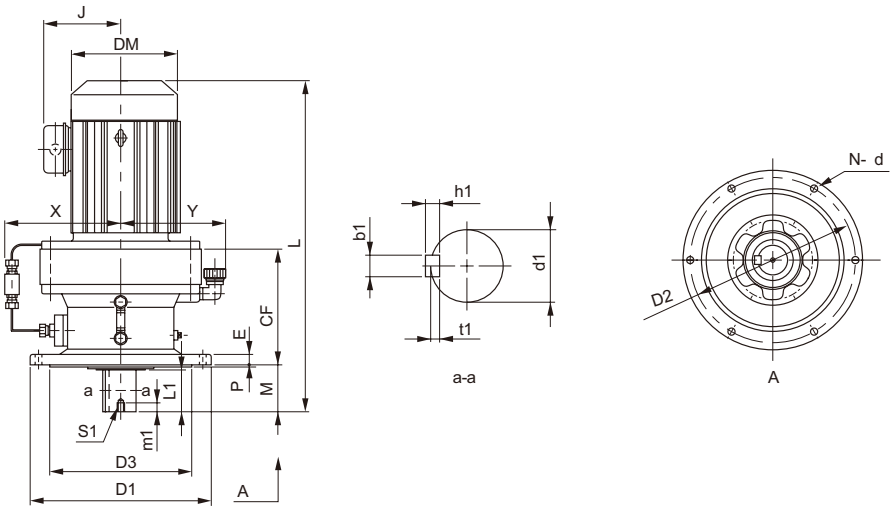

Frame size	CF	D1	D2	D3	M	E	P	N	d	X	Y	Output Shaft Note: 2, 3, 6						
												d1	L1	b1	h1	t1	S1	m1
6205	298	455	405	355	204	30	5	8	22	341	287	100	165	28	16	10	M20	34
6215	323	490	440	390	203	35	7	8	24	348	306	110	165	28	16	10	M20	34

Model Note: 5	Motor		Standard				With Brake			
	[kW]	[P]	L	J	DM	W [kg]	L	J	DM	W [kg]
CVVM15 - 6205 - (B) - Ratio	11	4	972	211	251	299	1067	211	251	317
CVVM20 - 6205 - (B) - Ratio	15	4	1042	261	324	353	1147	261	324	389
CVVM206 - 6205 - (B) - Ratio	15	6	1127	340	394	428	1292	340	394	473
CVVM25 - 6205 - (B) - Ratio	18.5	4	1127	340	394	428	1292	340	394	473
CVVM30 - 6205 - (B) - Ratio	22	4	1127	340	394	428	1292	340	394	473
CVVM306 - 6205 - (B) - Ratio	22	6	1127	340	394	441	1292	340	394	486
CVVM40 - 6205 - (B) - Ratio	30	4	1127	340	394	441	1292	340	394	486
CVVM406 - 6205 - (B) - Ratio	30	6	1242	340	394	479	1457	340	394	573
CVVM50 - 6205 - (B) - Ratio	37	4	1242	340	394	479	1457	340	394	573
CVVM506 - 6205 - (B) - Ratio	37	6	1242	340	394	479	1457	340	394	573
CVVM60 - 6205 - (B) - Ratio	45	4	1242	340	394	479	1457	340	394	573
CVVM606 - 6205 - (B) - Ratio	45	6	1297	390	484	572	-	-	-	-
CVVM75 - 6205 - (B) - Ratio	55	4	1297	390	484	572	-	-	-	-
CVVM15 - 6215 - (B) - Ratio	11	4	996	211	251	377	1091	211	251	395
CVVM20 - 6215 - (B) - Ratio	15	4	1066	261	324	432	1171	261	324	467
CVVM206 - 6215 - (B) - Ratio	15	6	1151	340	394	501	1316	340	394	546
CVVM25 - 6215 - (B) - Ratio	18.5	4	1151	340	394	501	1316	340	394	546
CVVM256 - 6215 - (B) - Ratio	18.5	6	1151	340	394	514	1316	340	394	559
CVVM30 - 6215 - (B) - Ratio	22	4	1151	340	394	501	1316	340	394	546
CVVM306 - 6215 - (B) - Ratio	22	6	1151	340	394	514	1316	340	394	559
CVVM40 - 6215 - (B) - Ratio	30	4	1151	340	394	514	1316	340	394	559
CVVM406 - 6215 - (B) - Ratio	30	6	1266	340	394	569	1481	340	394	664
CVVM50 - 6215 - (B) - Ratio	37	4	1266	340	394	569	1481	340	394	664
CVVM506 - 6215 - (B) - Ratio	37	6	1266	340	394	569	1481	340	394	664
CVVM60 - 6215 - (B) - Ratio	45	4	1266	340	394	569	1481	340	394	664
CVVM606 - 6215 - (B) - Ratio	45	6	1321	390	484	662	-	-	-	-
CVVM75 - 6215 - (B) - Ratio	55	4	1321	390	484	662	-	-	-	-

Note: 1. [ ] indicates motor capacity.
2. Dimension of shaft end diameter: Dimension tolerance conforms to JIS B 0401-1976 "h6."
3. Dimension of shaft end key: Dimension tolerance conforms to JIS B 1301-1996 "Parallel Key."
4. Pilot diameter (ϕD3): Dimension tolerance conforms to JIS B 0401-1976 “f8.”

Dimension Tables Gearmotors (Vertical, Slow Speed Shaft Down, V-Flange Mount)

CVVM[ ] Note: 1 - 6225 to 6235

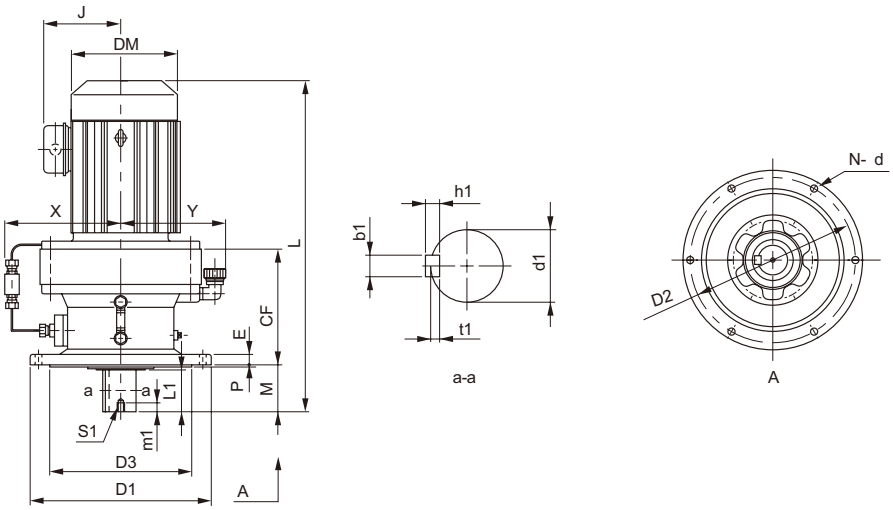

Frame size	CF	D1	D2	D3	M	E	P	N	d	X	Y	Output Shaft Note: 2, 3, 6						
												d1	L1	b1	h1	t1	S1	m1
6225	356	535	475	415	210	35	10	8	27	352	326	120	165	32	18	11	M20	34
6235	378	570	510	450	250	40	10	8	27	359	344	130	200	32	18	11	M24	41

Model Note: 5	Motor		Standard				With Brake			
	[kW]	[P]	L	J	DM	W [kg]	L	J	DM	W [kg]
CVVM206 - 6225 - (B) - Ratio	15	6	1191	340	394	593	1356	340	394	638
CVVM25 - 6225 - (B) - Ratio	18.5	4	1191	340	394	593	1356	340	394	638
CVVM256 - 6225 - (B) - Ratio	18.5	6	1191	340	394	606	1356	340	394	651
CVVM30 - 6225 - (B) - Ratio	22	4	1191	340	394	593	1356	340	394	638
CVVM306 - 6225 - (B) - Ratio	22	6	1191	340	394	606	1356	340	394	651
CVVM40 - 6225 - (B) - Ratio	30	4	1191	340	394	606	1356	340	394	651
CVVM406 - 6225 - (B) - Ratio	30	6	1306	340	394	660	1521	340	394	755
CVVM50 - 6225 - (B) - Ratio	37	4	1306	340	394	660	1521	340	394	755
CVVM506 - 6225 - (B) - Ratio	37	6	1306	340	394	660	1521	340	394	755
CVVM60 - 6225 - (B) - Ratio	45	4	1306	340	394	660	1521	340	394	755
CVVM606 - 6225 - (B) - Ratio	45	6	1361	390	484	743	-	-	-	-
CVVM75 - 6225 - (B) - Ratio	55	4	1361	390	484	743	-	-	-	-
CVVM206 - 6235 - (B) - Ratio	15	6	1253	340	394	653	1418	340	394	684
CVVM256 - 6235 - (B) - Ratio	18.5	6	1253	340	394	653	1418	340	394	698
CVVM306 - 6235 - (B) - Ratio	22	6	1253	340	394	653	1418	340	394	698
CVVM406 - 6235 - (B) - Ratio	30	6	1368	340	394	699	1583	340	394	787
CVVM506 - 6235 - (B) - Ratio	37	6	1368	340	394	699	1583	340	394	787
CVVM606 - 6235 - (B) - Ratio	45	6	1423	390	484	788	-	-	-	-
CVVM756 - 6235 - (B) - Ratio	55	6	1503	390	485	842	-	-	-	-

Note: 5. "B" after the frame size indicates models equipped with brake.
6. Dimension of shaft end: Refer to pages F-28 to F-29 for details.
7. Dimensions in above drawings are subject to change without notice.

Dimension Tables Gearmotors (Vertical, Slow Speed Shaft Down, V-Flange Mount)

CVVM[ ] Note: 1 - 6245 to 6265

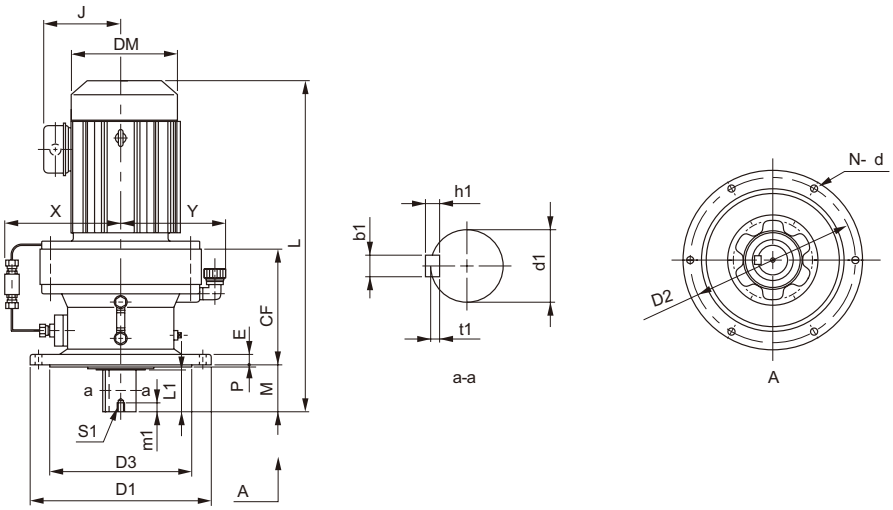

Frame size	CF	D1	D2	D3	M	E	P	N	d	X	Y	Output Shaft Note: 2, 3, 7						
												d1	L1	b1	h1	t1	S1	m1
6245	407	635	560	485	250	40	10	8	33	370	371	140	200	36	20	12	M24	41
6255	480	685	610	535	295	45	10	8	33	426	399	160	240	40	22	13	M30	49
6265	532	750	660	570	360	50	10	8	39	460	431	170	300	40	22	13	M30	49

Model Note: 6	Motor		Standard				With Brake			
	[kW]	[P]	L	J	DM	W [kg]	L	J	DM	W [kg]
CVVM206 - 6245 - (B) - Ratio	15	6	1282	340	394	759	1447	340	394	792
CVVM256 - 6245 - (B) - Ratio	18.5	6	1282	340	394	759	1447	340	394	806
CVVM306 - 6245 - (B) - Ratio	22	6	1282	340	394	759	1447	340	394	806
CVVM406 - 6245 - (B) - Ratio	30	6	1397	340	394	805	1612	340	394	893
CVVM506 - 6245 - (B) - Ratio	37	6	1397	340	394	805	1612	340	394	893
CVVM606 - 6245 - (B) - Ratio	45	6	1452	390	484	896	-	-	-	-
CVVM756 - 6245 - (B) - Ratio	55	6	1532	390	485	945	-	-	-	-
CVVM206 - 6255 - (B) - Ratio	15	6	1400	340	394	1045	1565	340	394	1123
CVVM256 - 6255 - (B) - Ratio	18.5	6	1400	340	394	1045	1565	340	394	1137
CVVM306 - 6255 - (B) - Ratio	22	6	1400	340	394	1045	1565	340	394	1137
CVVM406 - 6255 - (B) - Ratio	30	6	1515	340	394	1090	1730	340	394	1178
CVVM506 - 6255 - (B) - Ratio	37	6	1515	340	394	1090	1730	340	394	1178
CVVM606 - 6255 - (B) - Ratio	45	6	1570	390	484	1170	-	-	-	-
CVVM756 - 6255 - (B) - Ratio	55	6	1650	390	485	1225	-	-	-	-
CVVM406 - 6265 - (B) - Ratio	22	6	1517	340	394	1350	1727	340	394	1397
CVVM406 - 6265 - (B) - Ratio	30	6	1632	340	394	1395	1847	340	394	1483
CVVM506 - 6265 - (B) - Ratio	37	6	1632	340	394	1395	1847	340	394	1483
CVVM606 - 6265 - (B) - Ratio	45	6	1687	390	484	1490	-	-	-	-

Note: 1. [ ] indicates motor capacity.
2. Dimension of shaft end diameter: Dimension tolerance conforms to JIS B 0401-1976 "h6."
3. Dimension of shaft end key: Dimension tolerance conforms to JIS B 1301-1996 "Parallel Key."
4. Pilot diameter (ϕD3): Dimension tolerance conforms to JIS B 0401-1976 “f8.”

Dimension Tables Gearmotors (Universal Direction, V-Flange Mount)

CNVM□- 606□DA to 612□DB (Note: 1)

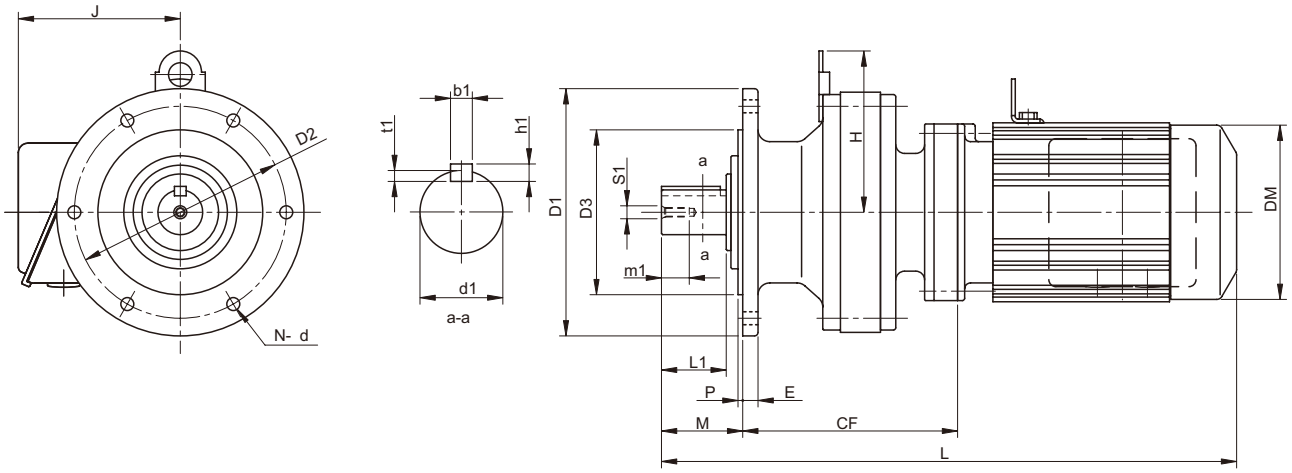

Frame size (Note: 5)	CF	D1	D2	D3	M	E	P	N	d	H	Output Shaft (Note: 2, 3, 7) d1	L1	b1	h1	t1	S1	m1
606□DA	91	120	102	80	34	8	3	6	9	-	14	25	5	5	3	M5	16
607□DA	89	160	134	110	42	9	3	4	11	-	18	30	6	6	3.5	M6	16
609□DA	142	160	134	110	48	9	3	4	11	107	28	35	8	7	4	M8	20
610□DA	156	160	134	110	48	9	3	4	11	107	28	35	8	7	4	M8	20
612□DA	171	210	180	140	69	13	4	6	11	137	38	55	10	8	5	M8	20
612□DB	183	210	180	140	69	13	4	6	11	-	38	55	10	8	5	M8	20

Model (Note: 5, 6)	Motor [kW]	Motor [P]	Standard L	Standard J	Standard DM	Standard W [kg]	With Brake L	With Brake J	With Brake DM	With Brake W [kg]
CNVM01 - 606□DA - (B) - Ratio	0.1	4	287	113	119	9	294	113	124	12
CNVM01 - 607□DA - (B) - Ratio	0.1	4	293	113	119	9	300	113	124	12
CNVM02 - 607□DA - (B) - Ratio	0.2	4	311	113	124	10	339	113	124	13
CNVM01 - 609□DA - (B) - Ratio	0.1	4	352	113	119	16	359	113	124	17
CNVM02 - 609□DA - (B) - Ratio	0.2	4	370	113	124	17	398	113	124	18
CNVM03 - 609□DA - (B) - Ratio	0.25	4	370	113	124	17	398	113	124	18
CNVM05 - 609□DA - (B) - Ratio	0.4	4	386	113	124	18	418	113	124	19
CNVM01 - 610□DA - (B) - Ratio	0.1	4	366	113	119	17	373	113	124	18
CNVM02 - 610□DA - (B) - Ratio	0.2	4	384	113	124	18	412	113	124	19
CNVM03 - 610□DA - (B) - Ratio	0.25	4	384	113	124	18	412	113	124	19
CNVM05 - 610□DA - (B) - Ratio	0.4	4	400	113	124	19	432	113	124	20
CNVM01 - 612□DA - (B) - Ratio	0.1	4	402	113	119	29	409	113	124	30
CNVM02 - 612□DA - (B) - Ratio	0.2	4	420	113	124	30	448	113	124	31
CNVM03 - 612□DA - (B) - Ratio	0.25	4	420	113	124	30	448	113	124	31
CNVM05 - 612□DA - (B) - Ratio	0.4	4	436	113	124	31	468	113	124	32
CNVM01 - 612□DB - (B) - Ratio	0.1	4	414	113	119	32	421	113	124	34
CNVM02 - 612□DB - (B) - Ratio	0.2	4	432	113	124	33	473	113	124	35
CNVM03 - 612□DB - (B) - Ratio	0.25	4	432	113	124	33	473	113	124	35
CNVM05 - 612□DB - (B) - Ratio	0.4	4	448	113	124	34	473	113	124	36
CNVM08 - 612□DB - (B) - Ratio	0.55	4	489	143	160	38	532	143	160	41
CNVM1 - 612□DB - (B) - Ratio	0.75	4	489	143	160	38	532	143	160	41
CNVM1H - 612□DB - (B) - Ratio	1.1	4	516	148	169	42	578	148	169	47
CNVM2 - 612□DB - (B) - Ratio	1.5	4	516	148	169	42	578	148	169	47

Note: 5. □ indicates 0 or 5, expressing combination with reduction ratio. Refer to the Selection Table for details.
6. "B" after the frame size indicates models equipped with brake.
7. Dimension of shaft end: Refer to pages F-28 to F-29 for details.
8. Dimensions in above drawings are subject to change without notice.

Dimension Tables Gearmotors (Vertical, Slow Speed Shaft Down, V-Flange Mount)

CVVM□ Note: 1 - 613□DA to 614□DC

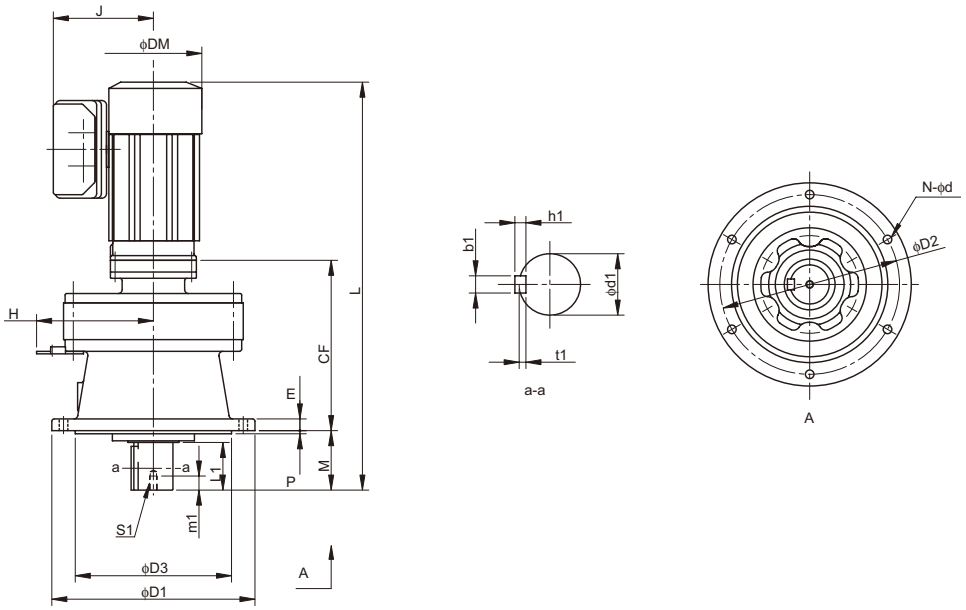

Frame size Note: 5	CF	D1	D2	D3	M	E	P	N	d	H	Output Shaft Note: 2, 3, 7						
											d1	L1	b1	h1	t1	S1	m1
613□DA	218	260	230	200	76	15	4	6	11	150	50	61	14	9	5.5	M10	18
613□DB	227	260	230	200	76	15	4	6	11	150	50	61	14	9	5.5	M10	18
613□DC	241	260	230	200	76	15	4	6	11	-	50	61	14	9	5.5	M10	18
614□DA	218	260	230	200	96	15	4	6	11	150	50	81	14	9	5.5	M10	18
614□DB	227	260	230	200	96	15	4	6	11	150	50	81	14	9	5.5	M10	18
614□DC	241	260	230	200	96	15	4	6	11	-	50	81	14	9	5.5	M10	18

Model Note: 5, 6	Motor		Standard				With Brake			
	[kW]	[P]	L	J	DM	W [kg]	L	J	DM	W [kg]
CVVM02 - 613□DA - (B) - Ratio	0.2	4	474	113	124	45	502	113	124	45
CVVM03 - 613□DA - (B) - Ratio	0.25	4	494	113	124	45	522	113	124	45
CVVM05 - 613□DA - (B) - Ratio	0.4	4	490	113	124	48	522	113	124	49
CVVM02 - 613□DB - (B) - Ratio	0.2	4	483	113	124	48	511	113	124	50
CVVM03 - 613□DB - (B) - Ratio	0.25	4	483	113	124	48	511	113	124	50
CVVM05 - 613□DB - (B) - Ratio	0.4	4	499	113	124	49	531	113	124	51
CVVM08 - 613□DB - (B) - Ratio	0.55	4	540	143	160	53	583	143	160	56
CVVM1 - 613□DB - (B) - Ratio	0.75	4	540	143	160	53	583	143	160	56
CVVM1H - 613□DB - (B) - Ratio	1.1	4	573	148	169	57	635	148	169	62
CVVM2 - 613□DB - (B) - Ratio	1.5	4	573	148	169	57	635	148	169	62
CVVM08 - 613□DC - (B) - Ratio	0.55	4	554	143	160	56	597	143	160	59
CVVM1 - 613□DC - (B) - Ratio	0.75	4	554	143	160	56	597	143	160	59
CVVM2 - 613□DC - (B) - Ratio	1.5	4	587	148	169	60	649	148	169	65
CVVM3 - 613□DC - (B) - Ratio	2.2	4	607	155	182	64	670	155	182	70
CVVM02 - 614□DA - (B) - Ratio	0.2	4	494	113	124	45	522	113	124	46
CVVM03 - 614□DA - (B) - Ratio	0.25	4	494	113	124	45	522	113	124	46
CVVM05 - 614□DA - (B) - Ratio	0.4	4	510	113	124	48	542	113	124	49
CVVM02 - 614□DB - (B) - Ratio	0.2	4	503	113	124	48	531	113	124	50
CVVM03 - 614□DB - (B) - Ratio	0.25	4	503	113	124	48	531	113	124	50
CVVM05 - 614□DB - (B) - Ratio	0.4	4	519	113	124	49	551	113	124	51
CVVM08 - 614□DB - (B) - Ratio	0.55	4	560	143	160	53	603	143	160	56
CVVM1 - 614□DB - (B) - Ratio	0.75	4	560	143	160	53	603	143	160	56
CVVM1H - 614□DB - (B) - Ratio	1.1	4	593	148	169	57	655	148	169	62
CVVM2 - 614□DB - (B) - Ratio	1.5	4	593	148	169	57	655	148	169	62
CVVM08 - 614□DC - (B) - Ratio	0.55	4	574	143	160	54	617	143	160	57
CVVM1 - 614□DC - (B) - Ratio	0.75	4	574	143	160	54	617	143	160	57
CVVM1H - 614□DC - (B) - Ratio	1.1	4	607	148	169	58	669	148	169	63
CVVM2 - 614□DC - (B) - Ratio	1.5	4	607	148	169	58	669	148	169	63
CVVM3 - 614□DC - (B) - Ratio	2.2	4	627	155	182	62	690	155	182	68

Note: 1. □ indicates motor capacity.
2. Dimension of shaft end diameter: Dimension tolerance conforms to JIS B 0401-1976 "h6."
3. Dimension of shaft end key: Dimension tolerance conforms to JIS B 1301-1996 "Parallel Key."
4. Pilot diameter (ϕD3): Dimension tolerance conforms to JIS B 0401-1976 “f8.”

Dimension Tables Gearmotors (Vertical, Slow Speed Shaft Down, V-Flange Mount)

CVVM□ Note: 1 - 616□DA to 618□DA

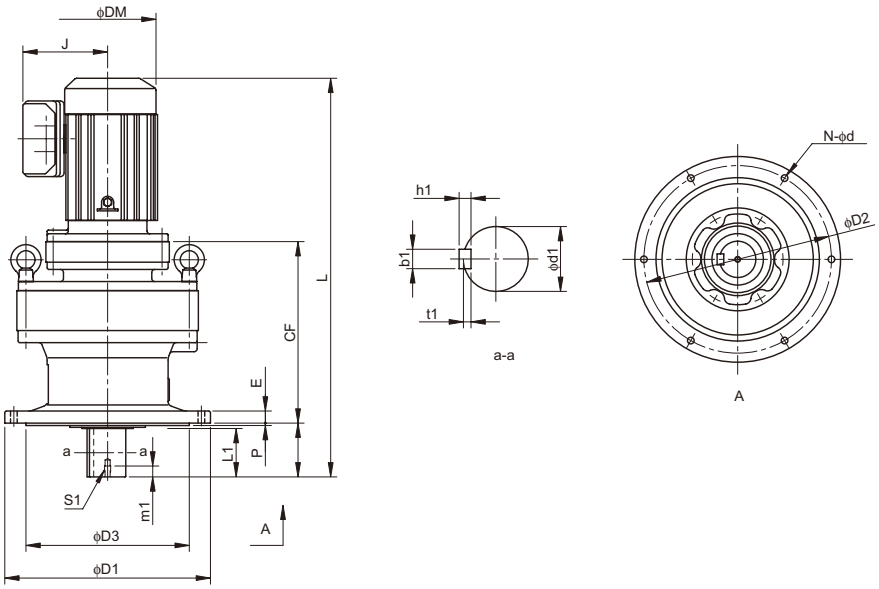

Frame size Note: 5	CF	D1	D2	D3	M	E	P	N	d	H	Output Shaft Note: 2, 3, 7						
											d1	L1	b1	h1	t1	S1	m1
616□DA	285	340	310	270	89	20	4	6	11	-	60	80	18	11	7	M10	18
616□DB	299	340	310	270	89	20	4	6	11	-	60	80	18	11	7	M10	18
617□DA	324	400	360	316	94	22	5	8	14	-	70	84	20	12	7.5	M12	24
617□DB	338	400	360	316	94	22	5	8	14	-	70	84	20	12	7.5	M12	24
618□DA	364	430	390	345	110	22	5	8	18	-	80	100	22	14	9	M12	24

Model Note: 5, 6	Motor		Standard				With Brake			
	[kW]	[P]	L	J	DM	W [kg]	L	J	DM	W [kg]
CVVM02 - 616□DA - (B) - Ratio	0.2	4	554	113	124	84	581	113	124	86
CVVM03 - 616□DA - (B) - Ratio	0.25	4	554	113	124	84	581	113	124	86
CVVM05 - 616□DA - (B) - Ratio	0.4	4	570	113	124	85	601	113	124	87
CVVM08 - 616□DA - (B) - Ratio	0.55	4	611	143	160	89	653	143	160	92
CVVM1 - 616□DA - (B) - Ratio	0.75	4	611	143	160	89	653	143	160	92
CVVM1H - 616□DA - (B) - Ratio	1.1	4	643	148	169	93	705	148	169	98
CVVM2 - 616□DA - (B) - Ratio	1.5	4	643	148	169	93	705	148	169	98
CVVM08 - 616□DB - (B) - Ratio	0.55	4	625	143	160	91	667	143	160	94
CVVM1 - 616□DB - (B) - Ratio	0.75	4	625	143	160	91	667	143	160	94
CVVM1H - 616□DB - (B) - Ratio	1.1	4	658	148	169	95	719	148	169	100
CVVM2 - 616□DB - (B) - Ratio	1.5	4	658	148	169	95	719	148	169	100
CVVM3 - 616□DB - (B) - Ratio	2.2	4	678	155	182	99	740	155	182	105
CVVM02 - 617□DA - (B) - Ratio	0.2	4	598	113	124	120	626	113	124	122
CVVM03 - 617□DA - (B) - Ratio	0.25	4	598	113	124	120	626	113	124	122
CVVM05 - 617□DA - (B) - Ratio	0.4	4	614	113	124	121	646	113	124	123
CVVM08 - 617□DA - (B) - Ratio	0.55	4	655	143	160	125	698	143	160	128
CVVM1 - 617□DA - (B) - Ratio	0.75	4	655	143	160	125	698	143	160	128
CVVM1H - 617□DA - (B) - Ratio	1.1	4	688	148	169	129	750	148	169	134
CVVM2 - 617□DA - (B) - Ratio	1.5	4	688	148	169	129	750	148	169	134
CVVM08 - 617□DB - (B) - Ratio	0.55	4	669	143	160	122	712	143	160	129
CVVM1 - 617□DB - (B) - Ratio	0.75	4	669	143	160	122	712	143	160	129
CVVM1H - 617□DB - (B) - Ratio	1.1	4	702	148	169	131	764	148	169	136
CVVM2 - 617□DB - (B) - Ratio	1.5	4	702	148	169	131	764	148	169	136
CVVM3 - 617□DB - (B) - Ratio	2.2	4	722	155	182	135	785	155	182	141
CVVM05 - 618□DA - (B) - Ratio	0.4	4	670	113	124	154	702	113	124	156
CVVM08 - 618□DA - (B) - Ratio	0.55	4	711	143	160	158	754	143	160	161
CVVM1 - 618□DA - (B) - Ratio	0.75	4	711	143	160	158	754	143	160	161
CVVM1H - 618□DA - (B) - Ratio	1.1	4	744	148	169	162	806	148	169	167
CVVM2 - 618□DA - (B) - Ratio	1.5	4	744	148	169	162	806	148	169	167
CVVM3 - 618□DA - (B) - Ratio	2.2	4	764	155	182	166	827	155	182	172

Note: 5. □ indicates 0 or 5, expressing combination with reduction ratio. Refer to the Selection Table for details.
6. "B" after the frame size indicates models equipped with brake.
7. Dimension of shaft end: Refer to pages F-28 to F-29 for details.
8. Dimensions in above drawings are subject to change without notice.

Dimension Tables Gearmotors (Vertical, Slow Speed Shaft Down, V-Flange Mount)

CVVM□ Note: 1 - 616□DC to 618□DB

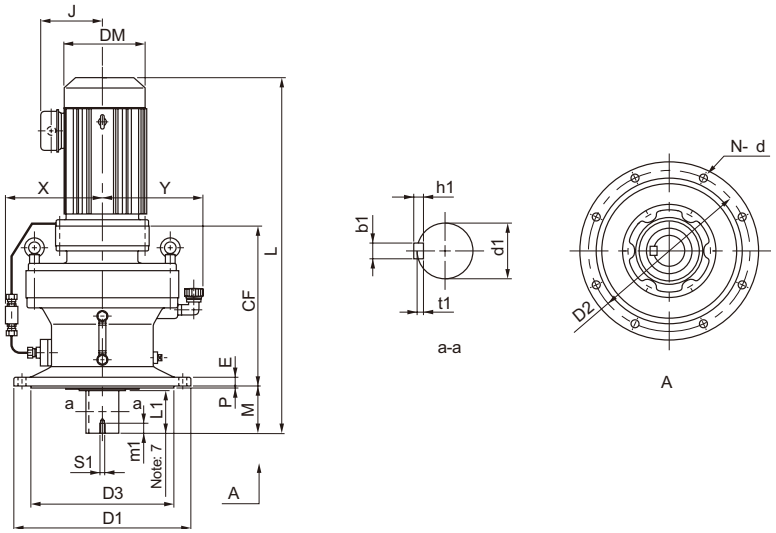

Frame size Note: 5	CF	D1	D2	D3	M	E	P	N	d	X	Y	Output Shaft Note: 2, 3, 7						
												d1	L1	b1	h1	t1	S1	m1
616□DC	300	340	310	270	89	20	4	6	11	196	200	60	80	18	11	7	M10	18
617□DC	342	400	360	316	94	22	5	8	14	218	225	70	84	20	12	7.5	M12	24
618□DB	386	430	390	345	110	22	5	8	18	233	240	80	100	22	14	9	M12	24

Model Note: 5, 6	Motor		Standard				With Brake			
	[kW]	[P]	L	J	DM	W [kg]	L	J	DM	W [kg]
CVVM1H - 616□DC - (B) - Ratio	1.1	4	659	148	169	103	721	148	169	108
CVVM2 - 616□DC - (B) - Ratio	1.5	4	659	148	169	103	721	148	169	108
CVVM3 - 616□DC - (B) - Ratio	2.2	4	679	155	182	107	742	155	182	114
CVVM4 - 616□DC - (B) - Ratio	3.0	4	702	166	222	117	774	166	222	127
CVVM5 - 616□DC - (B) - Ratio	3.7	4	702	166	222	117	774	166	222	127
CVVM8 - 616□DC - (B) - Ratio	5.5	4	746	166	222	127	818	166	222	131
CVVM1H - 617□DC - (B) - Ratio	1.1	4	706	148	169	138	768	148	169	143
CVVM2 - 617□DC - (B) - Ratio	1.5	4	706	148	169	138	768	148	169	143
CVVM3 - 617□DC - (B) - Ratio	2.2	4	726	155	182	142	789	155	182	152
CVVM4 - 617□DC - (B) - Ratio	3.0	4	749	166	222	152	821	166	222	165
CVVM5 - 617□DC - (B) - Ratio	3.7	4	749	166	222	152	821	166	222	165
CVVM8 - 617□DC - (B) - Ratio	5.5	4	793	166	222	162	865	166	222	172
CVVM1H - 618□DB - (B) - Ratio	1.1	4	766	148	169	179	828	148	169	184
CVVM2 - 618□DB - (B) - Ratio	1.5	4	766	148	169	179	828	148	169	184
CVVM3 - 618□DB - (B) - Ratio	2.2	4	786	155	182	183	849	155	182	190
CVVM4 - 618□DB - (B) - Ratio	3.0	4	809	166	222	193	881	166	222	203
CVVM5 - 618□DB - (B) - Ratio	3.7	4	809	166	222	193	881	166	222	203
CVVM8 - 618□DB - (B) - Ratio	5.5	4	853	166	222	200	925	166	222	210
CVVM10 - 618□DB - (B) - Ratio	7.5	4	876	211	251	215	971	211	251	231
CVVM15 - 618□DB - (B) - Ratio	11	4	936	211	251	229	1031	211	251	247

Note: 1. □ indicates motor capacity.
2. Dimension of shaft end diameter: Dimension tolerance conforms to JIS B 0401-1976 "h6."
3. Dimension of shaft end key: Dimension tolerance conforms to JIS B 1301-1996 "Parallel Key."
4. Pilot diameter (ϕD3): Dimension tolerance conforms to JIS B 0401-1976 “f8.”

Dimension Tables Gearmotors (Vertical, Slow Speed Shaft Down, V-Flange Mount)

CVVM□ Note: 1 - 619□DA to 619□DB

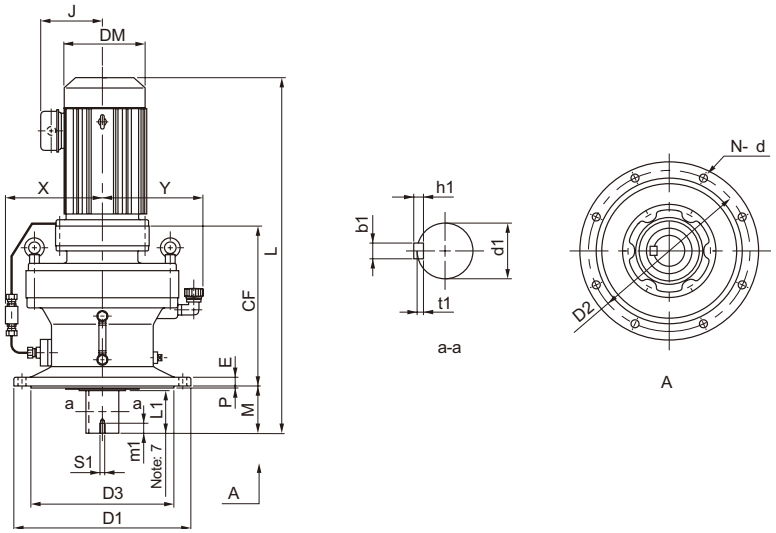

Frame size Note: 5	CF	D1	D2	D3	M	E	P	N	d	X	Y	Output Shaft Note: 2, 3, 7						
												d1	L1	b1	h1	t1	S1	m1
619□DA	411	490	450	400	145	30	6	12	18	255	270	95	125	25	14	9	M20	34
619□DB	427	490	450	400	145	30	6	12	18	255	270	95	125	25	14	9	M20	34

Model Note: 5, 6	Motor		Standard				With Brake			
	[kW]	[P]	L	J	DM	W [kg]	L	J	DM	W [kg]
CVVM1 - 619□DA - (B) - Ratio	0.75	4	793	143	160	238	836	143	160	241
CVVM1H - 619□DA - (B) - Ratio	1.1	4	826	148	169	242	888	148	169	247
CVVM2 - 619□DA - (B) - Ratio	1.5	4	826	148	169	242	888	148	169	247
CVVM3 - 619□DA - (B) - Ratio	2.2	4	846	155	182	246	909	155	182	253
CVVM4 - 619□DA - (B) - Ratio	3.0	4	869	166	222	256	941	166	222	266
CVVM5 - 619□DA - (B) - Ratio	3.7	4	869	166	222	256	941	166	222	266
CVVM8 - 619□DA - (B) - Ratio	5.5	4	913	166	222	263	985	166	222	273
CVVM2 - 619□DB - (B) - Ratio	1.5	4	842	148	169	249	904	148	169	254
CVVM3 - 619□DB - (B) - Ratio	2.2	4	862	155	182	253	925	155	182	260
CVVM4 - 619□DB - (B) - Ratio	3.0	4	885	166	222	263	957	166	222	273
CVVM5 - 619□DB - (B) - Ratio	3.7	4	885	166	222	263	957	166	222	273
CVVM8 - 619□DB - (B) - Ratio	5.5	4	929	166	222	270	1001	166	222	280
CVVM10 - 619□DB - (B) - Ratio	7.5	4	952	211	251	285	1047	211	251	303
CVVM15 - 619□DB - (B) - Ratio	11	4	1012	211	251	299	1107	211	251	317
CVVM20 - 619□DB - (B) - Ratio	15	4	1102	261	324	351	1207	261	324	385

Note: 5. □ indicates 0 or 5, expressing combination with reduction ratio. Refer to the Selection Table for details.
6. "B" after the frame size indicates models equipped with brake.
7. Dimension of shaft end: Refer to pages F-28 to F-29 for details.
8. Dimensions in above drawings are subject to change without notice.

Dimension Tables Gearmotors (Vertical, Slow Speed Shaft Down, V-Flange Mount)

CVVM[ ] Note: 1 - 6205DA to 6215DA

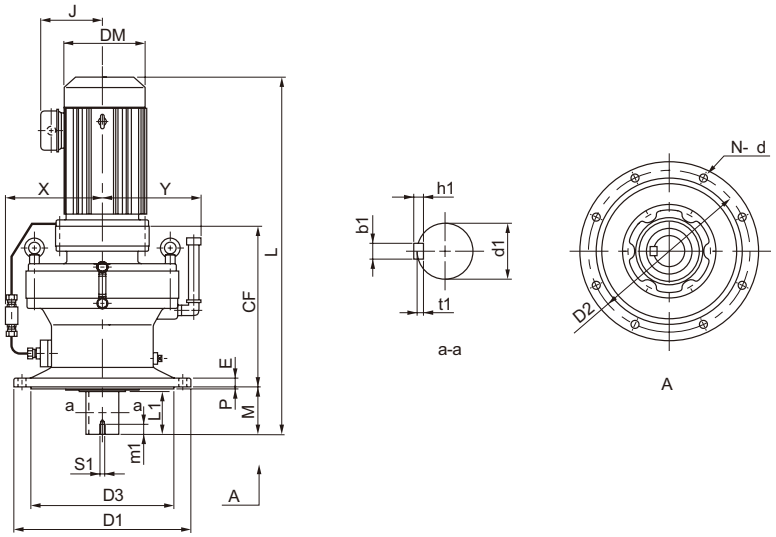

Frame size	CF	D1	D2	D3	M	E	P	N	d	X	Y	Output Shaft Note: 2, 3, 6						
												d1	L1	b1	h1	t1	S1	m1
6205DA	393	455	405	355	204	30	5	8	22	341	287	100	165	28	16	10	M20	34
6205DB	420	455	405	355	204	30	5	8	22	341	287	100	165	28	16	10	M20	34
6215DA	447	490	440	390	203	35	7	8	24	348	306	110	165	28	16	10	M20	34

Model Note: 5	Motor		Standard				With Brake			
	[kW]	[P]	L	J	DM	W [kg]	L	J	DM	W [kg]
CVVM1 - 6205DA - (B) - Ratio	0.75	4	834	143	160	254	877	143	160	257
CVVM2 - 6205DA - (B) - Ratio	1.5	4	867	148	169	257	929	148	169	263
CVVM3 - 6205DA - (B) - Ratio	2.2	4	887	155	182	262	949	155	182	269
CVVM4 - 6205DA - (B) - Ratio	3.0	4	910	166	222	272	982	166	222	282
CVVM5 - 6205DA - (B) - Ratio	3.7	4	910	166	222	272	982	166	222	282
CVVM8 - 6205DA - (B) - Ratio	5.5	4	954	166	222	279	1026	166	222	289
CVVM3 - 6205DB - (B) - Ratio	2.2	4	914	155	182	274	977	155	182	281
CVVM4 - 6205DB - (B) - Ratio	3.0	4	937	166	222	284	1009	166	222	294
CVVM5 - 6205DB - (B) - Ratio	3.7	4	937	166	222	284	1009	166	222	301
CVVM8 - 6205DB - (B) - Ratio	5.5	4	981	166	222	291	1053	166	222	324
CVVM10 - 6205DB - (B) - Ratio	7.5	4	1004	211	251	306	1099	211	251	347
CVVM15 - 6205DB - (B) - Ratio	11	4	1064	211	251	320	1159	211	251	361
CVVM20 - 6205DB - (B) - Ratio	15	4	1154	259	324	372	1259	259	324	429
CVVM2 - 6215DA - (B) - Ratio	1.5	4	920	148	169	331	982	148	169	336
CVVM3 - 6215DA - (B) - Ratio	2.2	4	940	155	182	334	1003	155	182	341
CVVM4 - 6215DA - (B) - Ratio	3.0	4	963	166	222	344	1035	166	222	354
CVVM5 - 6215DA - (B) - Ratio	3.7	4	963	166	222	344	1035	166	222	354
CVVM8 - 6215DA - (B) - Ratio	5.5	4	1007	166	222	351	1079	166	222	361
CVVM10 - 6215DA - (B) - Ratio	7.5	4	1030	211	251	366	1125	211	251	384
CVVM15 - 6215DA - (B) - Ratio	11	4	1090	211	251	380	1185	211	251	398
CVVM20 - 6215DA - (B) - Ratio	15	4	1180	261	324	432	1285	261	324	466

Note: 1. [ ] indicates motor capacity.
2. Dimension of shaft end diameter: Dimension tolerance conforms to JIS B 0401-1976 "h6."
3. Dimension of shaft end key: Dimension tolerance conforms to JIS B 1301-1996 "Parallel Key."
4. Pilot diameter (ϕD3): Dimension tolerance conforms to JIS B 0401-1976 “f8.”

Dimension Tables Gearmotors (Vertical, Slow Speed Shaft Down, V-Flange Mount)

CVVM[ ]- 6215DB to 6225DB

Note: 1

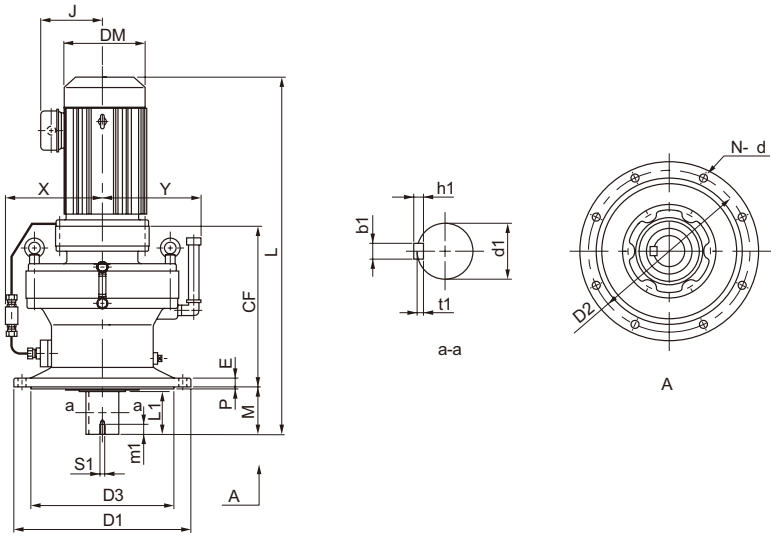

Frame size	CF	D1	D2	D3	M	E	P	N	d	X	Y	Output Shaft Note: 2, 3, 6						
												d1	L1	b1	h1	t1	S1	m1
6215DB	472	490	440	390	203	35	7	8	24	348	306	110	165	28	16	10	M20	34
6225DA	482	535	475	415	210	35	10	8	27	352	326	120	165	32	18	11	M20	34
6225DB	525	535	475	415	210	35	10	8	27	352	326	120	165	32	18	11	M20	34

Model Note: 5	Motor		Standard				With Brake			
	[kW]	[P]	L	J	DM	W [kg]	L	J	DM	W [kg]
CVVM5 - 6215DB - (B) - Ratio	3.7	4	993	166	222	377	1065	166	222	387
CVVM8 - 6215DB - (B) - Ratio	5.5	4	1037	166	222	384	1109	166	222	400
CVVM10 - 6215DB - (B) - Ratio	7.5	4	1060	211	251	400	1155	211	251	417
CVVM15 - 6215DB - (B) - Ratio	11	4	1120	211	251	414	1215	211	251	431
CVVM20 - 6215DB - (B) - Ratio	15	4	1205	261	324	467	1310	261	324	500
CVVM25 - 6215DB - (B) - Ratio	18.5	4	1300	340	394	543	1465	340	394	587
CVVM30 - 6215DB - (B) - Ratio	22	4	1300	340	394	543	1465	340	394	587
CVVM2 - 6225DA - (B) - Ratio	1.5	4	962	148	169	420	1024	148	169	425
CVVM3 - 6225DA - (B) - Ratio	2.2	4	982	155	182	423	1045	155	182	430
CVVM4 - 6225DA - (B) - Ratio	3.0	4	1005	166	222	433	1077	166	222	443
CVVM5 - 6225DA - (B) - Ratio	3.7	4	1005	166	222	433	1077	166	222	443
CVVM8 - 6225DA - (B) - Ratio	5.5	4	1049	166	222	440	1121	166	222	450
CVVM10 - 6225DA - (B) - Ratio	7.5	4	1072	211	251	455	1167	211	251	473
CVVM15 - 6225DA - (B) - Ratio	11	4	1132	211	251	469	1227	211	251	486
CVVM20 - 6225DA - (B) - Ratio	15	4	1222	261	324	521	1327	261	324	554
CVVM5 - 6225DB - (B) - Ratio	3.7	4	1058	166	222	479	1130	166	222	490
CVVM8 - 6225DB - (B) - Ratio	5.5	4	1102	166	222	486	1174	166	222	497
CVVM10 - 6225DB - (B) - Ratio	7.5	4	1125	211	251	501	1220	211	251	519
CVVM15 - 6225DB - (B) - Ratio	11	4	1185	211	251	515	1280	211	251	533
CVVM20 - 6225DB - (B) - Ratio	15	4	1265	261	324	569	1370	261	324	603
CVVM25 - 6225DB - (B) - Ratio	18.5	4	1360	340	394	661	1525	340	394	685
CVVM30 - 6225DB - (B) - Ratio	22	4	1360	340	394	661	1525	340	394	685
CVVM40 - 6225DB - (B) - Ratio	30	4	1360	340	394	678	1525	340	394	721

Note: 5. "B" after the frame size indicates models equipped with brake.
6. Dimension of shaft end: Refer to pages F-28 to F-29 for details.
7. Dimensions in above drawings are subject to change without notice.

Dimension Tables Gearmotors (Vertical, Slow Speed Shaft Down, V-Flange Mount)

CVVM[ ] Note: 1 - 6235DA to 6245DB

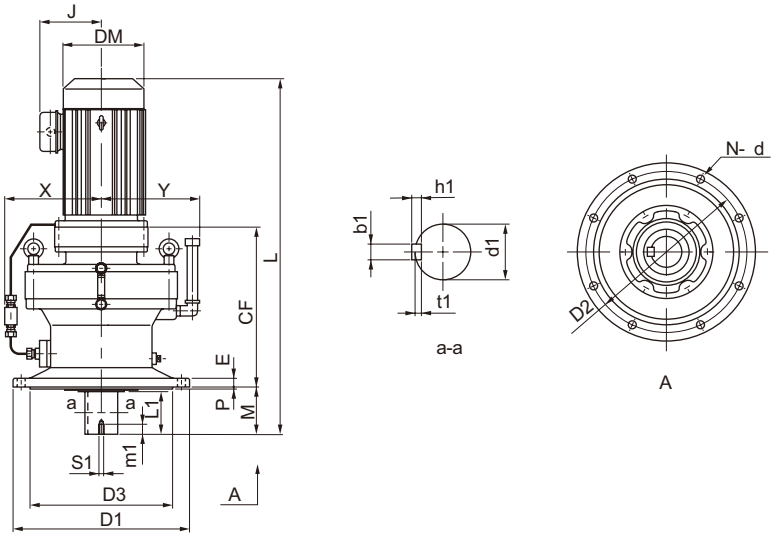

Frame size	CF	D1	D2	D3	M	E	P	N	d	X	Y	Output Shaft Note: 2, 3, 6						
												d1	L1	b1	h1	t1	S1	m1
6235DA	529	570	510	450	250	40	10	8	27	359	344	130	200	32	18	11	M24	41
6235DB	551	570	510	450	250	40	10	8	27	359	344	130	200	32	18	11	M24	41
6245DA	566	635	560	485	250	40	10	8	33	370	371	140	200	36	20	12	M24	41
6245DB	587	635	560	485	250	40	10	8	33	370	371	140	200	36	20	12	M24	41

Model Note: 5	Motor		Standard				With Brake			
	[kW]	[P]	L	J	DM	W [kg]	L	J	DM	W [kg]
CVVM3 - 6235DA - (B) - Ratio	2.2	4	1069	155	182	523	1131	155	182	529
CVVM4 - 6235DA - (B) - Ratio	3.0	4	1091	166	222	532	1163	166	222	542
CVVM5 - 6235DA - (B) - Ratio	3.7	4	1091	166	222	532	1163	166	222	542
CVVM8 - 6235DA - (B) - Ratio	5.5	4	1135	166	222	539	1207	166	222	549
CVVM10 - 6235DA - (B) - Ratio	7.5	4	1163	211	251	555	1258	211	251	572
CVVM15 - 6235DA - (B) - Ratio	11	4	1223	211	251	569	1318	211	251	586
CVVM20 - 6235DA - (B) - Ratio	15	4	1309	261	324	622	1413	261	324	656
CVVM25 - 6235DA - (B) - Ratio	18.5	4	1403	340	394	698	1568	340	394	742
CVVM30 - 6235DA - (B) - Ratio	22	4	1403	340	394	698	1568	340	394	742
CVVM15 - 6235DB - (B) - Ratio	11	4	1245	211	251	601	1340	211	251	619
CVVM20 - 6235DB - (B) - Ratio	15	4	1330	261	324	663	1435	261	324	697
CVVM25 - 6235DB - (B) - Ratio	18.5	4	1425	340	394	730	1590	340	394	781
CVVM30 - 6235DB - (B) - Ratio	22	4	1425	340	394	730	1590	340	394	781
CVVM40 - 6235DB - (B) - Ratio	30	4	1425	340	394	744	1590	340	394	787
CVVM50 - 6235DB - (B) - Ratio	37	4	1540	340	394	792	1755	340	394	889
CVVM3 - 6245DA - (B) - Ratio	2.2	4	1106	155	182	617	1169	155	182	623
CVVM4 - 6245DA - (B) - Ratio	3.0	4	1129	166	222	626	1201	166	222	636
CVVM5 - 6245DA - (B) - Ratio	3.7	4	1129	166	222	626	1201	166	222	636
CVVM8 - 6245DA - (B) - Ratio	5.5	4	1173	166	222	633	1245	166	222	643
CVVM10 - 6245DA - (B) - Ratio	7.5	4	1201	211	251	649	1296	211	251	666
CVVM15 - 6245DA - (B) - Ratio	11	4	1261	211	251	663	1356	211	251	680
CVVM20 - 6245DA - (B) - Ratio	15	4	1346	261	324	716	1451	261	324	750
CVVM25 - 6245DA - (B) - Ratio	18.5	4	1441	340	394	792	1606	340	394	845
CVVM30 - 6245DA - (B) - Ratio	22	4	1441	340	394	792	1606	340	394	845
CVVM15 - 6245DB - (B) - Ratio	11	4	1282	211	251	690	1377	211	251	708
CVVM20 - 6245DB - (B) - Ratio	15	4	1367	261	324	750	1472	261	324	779
CVVM25 - 6245DB - (B) - Ratio	18.5	4	1462	340	394	816	1627	340	394	867
CVVM30 - 6245DB - (B) - Ratio	22	4	1462	340	394	816	1627	340	394	867
CVVM40 - 6245DB - (B) - Ratio	30	4	1462	340	394	833	1627	340	394	876
CVVM50 - 6245DB - (B) - Ratio	37	4	1577	340	394	881	1792	340	394	978

Note: 1. [ ] indicates motor capacity.
2. Dimension of shaft end diameter: Dimension tolerance conforms to JIS B 0401-1976 "h6."
3. Dimension of shaft end key: Dimension tolerance conforms to JIS B 1301-1996 "Parallel Key."
4. Pilot diameter (ϕD3): Dimension tolerance conforms to JIS B 0401-1976 “f8.”

Dimension Tables Gearmotors (Vertical, Slow Speed Shaft Down, V-Flange Mount)

CVVM[ ]- 6255DA to 6275DA
Note: 1

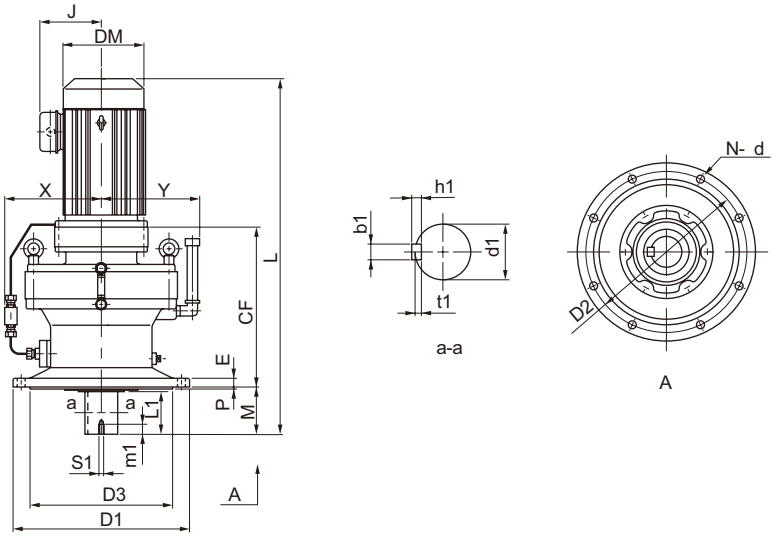

Frame size	CF	D1	D2	D3	M	E	P	N	d	X	Y	Output Shaft Note: 2, 3, 6						
												d1	L1	b1	h1	t1	S1	m1
6255DA	661	685	610	535	295	45	10	8	33	395	399	160	240	40	22	13	M30	49
6255DB	684	685	610	535	295	45	10	8	33	395	399	160	240	40	22	13	M30	49
6265DA	728	750	660	570	360	50	10	8	39	427	431	170	300	40	22	13	M30	49
6275DA	994	1160	1020	900	355	60	10	8	39	610	613	180	320	45	25	15	M30	52

Model Note: 5	Motor		Standard				With Brake			
	[kW]	[P]	L	J	DM	W [kg]	L	J	DM	W [kg]
CVVM5 - 6255DA - (B) - Ratio	3.7	4	1284	166	222	947	1356	166	222	957
CVVM8 - 6255DA - (B) - Ratio	5.5	4	1328	166	222	954	1400	166	222	964
CVVM10 - 6255DA - (B) - Ratio	7.5	4	1346	211	251	969	1441	211	251	984
CVVM15 - 6255DA - (B) - Ratio	11	4	1406	211	251	983	1501	211	251	998
CVVM20 - 6255DA - (B) - Ratio	15	4	1486	261	324	1041	1591	261	324	1077
CVVM25 - 6255DA - (B) - Ratio	18.5	4	1581	340	394	1110	1746	340	394	1161
CVVM30 - 6255DA - (B) - Ratio	22	4	1581	340	394	1110	1746	340	394	1161
CVVM40 - 6255DA - (B) - Ratio	30	4	1581	340	394	1129	1746	340	394	1172
CVVM15 - 6255DB - (B) - Ratio	11	4	1443	211	251	1059	1538	211	251	1074
CVVM20 - 6255DB - (B) - Ratio	15	4	1508	261	324	1109	1613	261	324	1143
CVVM25 - 6255DB - (B) - Ratio	18.5	4	1603	340	394	1185	1768	340	394	1236
CVVM30 - 6255DB - (B) - Ratio	22	4	1603	340	394	1185	1768	340	394	1236
CVVM40 - 6255DB - (B) - Ratio	30	4	1603	340	394	1200	1768	340	394	1243
CVVM50 - 6255DB - (B) - Ratio	37	4	1718	340	394	1238	1928	340	394	1335
CVVM60 - 6255DB - (B) - Ratio	45	4	1718	340	394	1238	1928	340	394	1335
CVVM8 - 6265DA - (B) - Ratio	5.5	4	1480	166	222	1296	1552	166	222	1306
CVVM10 - 6265DA - (B) - Ratio	7.5	4	1493	211	251	1309	1588	211	251	1329
CVVM15 - 6265DA - (B) - Ratio	11	4	1553	211	251	1326	1648	211	251	1341
CVVM20 - 6265DA - (B) - Ratio	15	4	1618	261	324	1376	1723	261	324	1412
CVVM25 - 6265DA - (B) - Ratio	18.5	4	1713	340	394	1455	1878	340	394	1500
CVVM30 - 6265DA - (B) - Ratio	22	4	1713	340	394	1455	1878	340	394	1500
CVVM40 - 6265DA - (B) - Ratio	30	4	1713	340	394	1470	1878	340	394	1513
CVVM50 - 6265DA - (B) - Ratio	37	4	1828	340	394	1505	2043	340	394	1598
CVVM60 - 6265DA - (B) - Ratio	45	4	1828	340	394	1505	2043	340	394	1598
CVVM10 - 6275DA - (B) - Ratio	7.5	4	1754	211	251	2694	1849	211	251	2714
CVVM15 - 6275DA - (B) - Ratio	11	4	1814	211	251	2708	1909	211	251	2723
CVVM20 - 6275DA - (B) - Ratio	15	4	1879	261	324	2761	1984	261	324	2797
CVVM25 - 6275DA - (B) - Ratio	18.5	4	1974	340	394	2840	2139	340	394	2885
CVVM30 - 6275DA - (B) - Ratio	22	4	1974	340	394	2840	2139	340	394	2885
CVVM40 - 6275DA - (B) - Ratio	30	4	1974	340	394	2855	2139	340	394	2898
CVVM50 - 6275DA - (B) - Ratio	37	4	2089	340	394	2890	2304	340	394	2983
CVVM60 - 6275DA - (B) - Ratio	45	4	2089	340	394	2890	2304	340	394	2983

Note: 5. "B" after the frame size indicates models equipped with brake.
6. Dimension of shaft end: Refer to pages F-28 to F-29 for details.
7. Dimensions in above drawings are subject to change without notice.

Dimension Tables Gearmotors (Universal Direction, Foot-Mount)

CNHM[ ]- 610H, 612H (Center Height Option)

Note: 1

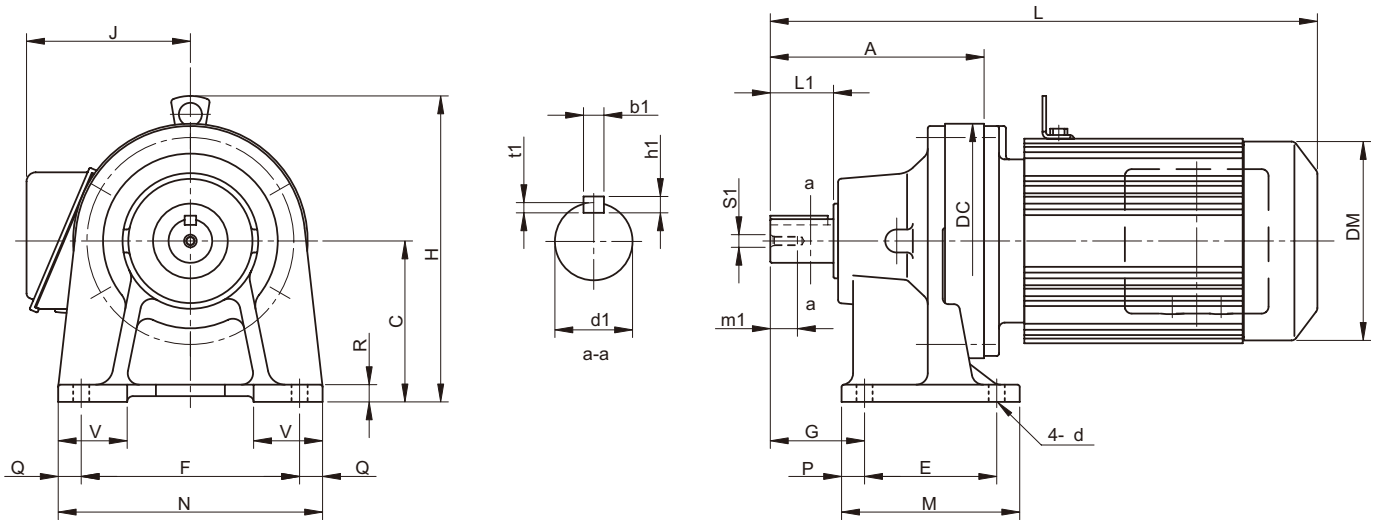

Frame size	A	C	DC	E	F	G	M	N	P	Q	R	V	d	Output Shaft Note: 2, 3, 5						
														d1	L1	b1	h1	t1	S1	m1
610H	156	120	150	90	150	60	135	180	15	15	12	40	11	28	35	8	7	4	M8	20
612H	186	140	204	115	190	82	155	230	20	20	15	60	14	38	55	10	8	5	M8	20

Model Note: 4	Motor		Standard					With Brake				
	[kW]	[P]	L	H	J	DM	W [kg]	L	H	J	DM	W [kg]
CNHM02 - 610H - (B) - Ratio	0.2	4	336	207	113	124	19	364	207	113	124	21
CNHM03 - 610H - (B) - Ratio	0.25	4	336	207	113	124	19	364	207	113	124	21
CNHM05 - 610H - (B) - Ratio	0.4	4	352	207	113	124	20	384	207	113	124	22
CNHM08 - 610H - (B) - Ratio	0.55	4	393	213	143	160	24	436	213	143	160	27
CNHM1 - 610H - (B) - Ratio	0.75	4	393	213	143	160	24	436	213	143	160	27
CNHM1H - 610H - (B) - Ratio	1.1	4	426	220	148	169	28	488	220	148	169	33
CNHM2 - 610H - (B) - Ratio	1.5	4	426	220	148	169	28	488	220	148	169	33
CNHM3 - 610H - (B) - Ratio	2.2	4	446	226	155	182	32	509	226	155	182	38
CNHM05 - 612H - (B) - Ratio	0.4	4	387	257	113	124	31	419	257	113	124	33
CNHM08 - 612H - (B) - Ratio	0.55	4	423	233	143	160	33	466	233	143	160	36
CNHM1 - 612H - (B) - Ratio	0.75	4	423	233	143	160	33	466	233	143	160	36
CNHM1H - 612H - (B) - Ratio	1.1	4	456	240	148	169	37	518	240	148	169	42
CNHM2 - 612H - (B) - Ratio	1.5	4	456	240	148	169	37	518	240	148	169	42
CNHM3 - 612H - (B) - Ratio	2.2	4	476	246	155	182	51	539	246	155	182	48
CNHM4 - 612H - (B) - Ratio	3.0	4	499	266	166	222	51	571	266	166	222	61
CNHM5 - 612H - (B) - Ratio	3.7	4	499	266	166	222	51	571	266	166	222	61
CNHM8 - 612H - (B) - Ratio	5.5	4	543	266	166	222	58	615	266	166	222	68

Note: 1. [ ] indicates motor capacity.
2. Dimension of shaft end diameter: Dimension tolerance conforms to JIS B 0401-1976 "h6."
3. Dimension of shaft end key: Dimension tolerance conforms to JIS B 1301-1996 "Parallel Key."

Dimension Tables Gearmotors (Horizontal Direction, Foot-Mount)

CHHM□ (Note: 1) - 614H, 616H (Center Height Option)

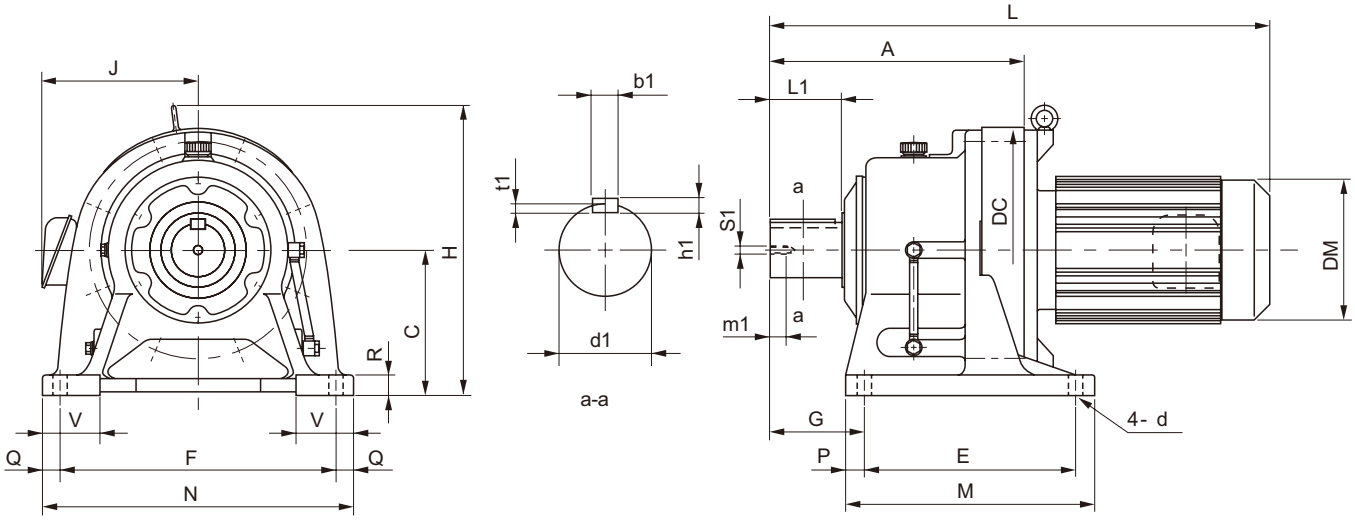

Frame size	A	C	DC	E	F	G	M	N	P	Q	R	V	d	Output Shaft (Note: 2, 3, 5) d1	L1	b1	h1	t1	S1	m1
614H	260	160	230	145	290	120	195	330	25	20	22	65	18	50	90	14	9	5.5	M10	18
616H	308	200	300	150	370	139	238	410	44	20	25	75	18	60	90	18	11	7	M10	18

Model (Note: 4)	Motor [kW]	Motor [P]	Standard L	Standard H	Standard J	Standard DM	Standard W [kg]	With Brake L	With Brake H	With Brake J	With Brake DM	With Brake W [kg]
CHHM1 - 614H - (B) - Ratio	0.75	4	497	268	143	160	52	540	268	143	160	57
CHHM1H - 614H - (B) - Ratio	1.1	4	530	268	148	169	58	592	268	148	169	63
CHHM2 - 614H - (B) - Ratio	1.5	4	530	268	148	169	58	592	268	148	169	63
CHHM3 - 614H - (B) - Ratio	2.2	4	550	274	155	182	61	613	274	155	182	68
CHHM4 - 614H - (B) - Ratio	3.0	4	573	296	166	222	71	645	296	166	222	81
CHHM5 - 614H - (B) - Ratio	3.7	4	573	296	166	222	71	645	296	166	222	81
CHHM8 - 614H - (B) - Ratio	5.5	4	617	296	166	222	78	689	296	166	222	88
CHHM10 - 614H - (B) - Ratio	7.5	4	640	323	211	251	93	735	323	211	251	111
CHHM15 - 614H - (B) - Ratio	11	4	700	323	211	251	107	795	323	211	251	125
*CHHM20 - 614H - (B) - Ratio	15	4	790	358	261	324	159	895	321	261	324	193
CHHM1H - 616H - (B) - Ratio	1.1	4	583	310	148	169	99	645	310	148	169	104
CHHM2 - 616H - (B) - Ratio	1.5	4	583	310	148	169	99	645	310	148	169	104
CHHM3 - 616H - (B) - Ratio	2.2	4	598	310	155	182	102	661	310	155	182	108
CHHM4 - 616H - (B) - Ratio	3.0	4	621	310	166	222	111	693	310	166	222	121
CHHM5 - 616H - (B) - Ratio	3.7	4	621	310	166	222	111	693	310	166	222	121
CHHM8 - 616H - (B) - Ratio	5.5	4	665	310	166	222	118	737	310	166	222	128
CHHM10 - 616H - (B) - Ratio	7.5	4	693	333	211	251	134	788	333	211	251	151
CHHM15 - 616H - (B) - Ratio	11	4	753	333	211	251	148	848	333	211	251	165
CHHM20 - 616H - (B) - Ratio	15	4	838	368	261	324	201	943	368	261	324	235
CHHM25 - 616H - (B) - Ratio	18.5	4	933	368	340	394	277	1098	368	340	394	328
CHHM30 - 616H - (B) - Ratio	22	4	933	368	340	394	277	1098	368	340	394	328

"*" indicates models with bottom level of the motor lower than the reducer base.

Note: 4. "B" after the frame size indicates models equipped with brake.
5. Dimension of shaft end: Refer to pages F-28 to F-29 for details.
6. Dimensions in above drawings are subject to change without notice.

M E M O